KV-F25MF1J/F29MF1J/F29SF11

RM-857

SERVICE MANUAL

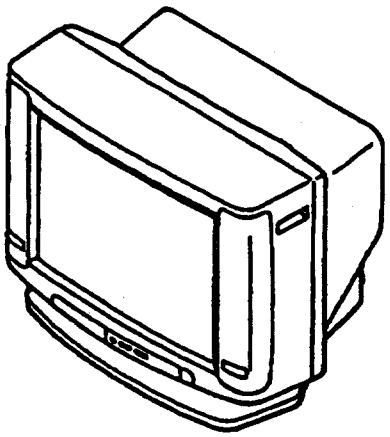

ME Model

KV-F25MF1J
Chassis No. SCC-G37T-A
KV-F29MF1J
Chassis No. SCC-G37U-A

Newzealand Model

KV-F29SF11
Chassis No. SCC-H60A-A

G3F CHASSIS

MODELS OF THE SAME SERIES	
KV-F25MF1J/F29MF1J/F29SF11	
KV-F29SZ2	

MICROFILM

TRINITRON® COLOR TV

SONY®

SPECIFICATIONS

Specifications	KV-F25MF1J	KV-F29MF1J	KV-F29SF11	Note
Power requirements	110-240 V AC, 50/60 Hz			
Power consumption (W)	163	169		
Television system	B/G, I, D/K, M			
Color system	PAL, PAL 60, SECAM, NTSC4.43, NTSC3.58			
Channel coverage				
B/G	VHF: E2 to E12/UHF: E21 to E69/CATV: S01 to S03, S1 to S41			
I	UHF: B21 to B68/CATV: S01 to S03, S1 to S41			
D/K	VHF: R1 to R12/UHF: R21 to R60/CATV: S01 to S03, S1 to S41			
M	VHF: A2 to A13/UHF: A14 to A79/ CATV: A-8 to E, G to W+25, W+27 to W+84			
Antenna	75-ohm external antenna terminal for VHF/UHF			
Audio output (speaker)	6 W × 2			
Number of terminal				
Video	Input: 3 Output: 1			
Audio	Input: 3 Output: 1			
S1-Video	Input: 2			Y: 1 Vp-p, 75 ohms, unbalanced, sync negative C: 0.286 Vp-p, 75 ohms
Picture tube	Super Trinitron			
Tube size (inch)	25	29		Measured diagonally
Screen size (cm)	60	68		Measured diagonally
Dimensions (w/h/d, mm)	690 × 521 × 511	782 × 593 × 534		
Mass (kg)	35	47		
Accessories				
Supplied	Remote commander (1)			
	Size R6 (AA) battery (2)			
Optional	TV stand SU-F25	TV stand SU-F29		
	Magic commander RM-829, RM-848			

Design and specifications are subject to change without notice.

TABLE OF CONTENTS

Section	Title	Page
1. GENERAL		4
2. DISASSEMBLY		
2-1.	Rear Cover Removal	12
2-2.	Chassis Assy Removal	12
2-3.	Service Position	12
2-4.	Extension Cable	13
2-5.	Demagnetization Coil Removal	13
2-6.	Picture Tube Removal	14
3. SET-UP ADJUSTMENTS		
3-1.	Beam Landing	15
3-2.	Convergence	16
3-3.	Focus Adjustment	18
3-4.	G2 (Screen) and White Balance Adjustments	19
4. SELF DIAGNOSIS FUNCTION		20
5. CIRCUIT ADJUSTMENTS		
5-1.	Adjustments with Commander	21
5-2.	Adjustment Method	22
5-3.	Picture Quality Adjustments	25
5-4.	A Board Adjustment	25
5-5.	Picture Distortion Adjustment	26
6. DIAGRAMS		
6-1.	Block Diagram	27
6-2.	Frame Schematic Diagram	31
6-3.	Circuit Boards Location	33
6-4.	Schematic Diagrams and Printed Wiring Boards	34
(1)	Schematic Diagrams of D, F1, F2, F3, H3, H4 and H5 Boards	39
(2)	Schematic Diagram of A Board	43
(3)	Schematic Diagrams of A2, D1, V and VM Boards	53
(4)	Schematic Diagram of C Board	56
6-5.	Semiconductors	58
7. EXPLODED VIEWS		
7-1.	Chassis	60
7-2.	Picture Tube	61
8. ELECTRICAL PARTS LIST		62

CAUTION

SHORT CIRCUIT THE ANODE OF THE PICTURE TUBE AND THE ANODE CAP TO THE METAL CHASSIS, CRT SHIELD, OR CARBON PAINTED ON THE CRT, AFTER REMOVING THE ANODE.

SAFETY-RELATED COMPONENT WARNING!!

COMPONENTS IDENTIFIED BY SHADING AND MARK ⚠ ON THE SCHEMATIC DIAGRAMS, EXPLODED VIEWS AND IN THE PARTS LIST ARE CRITICAL TO SAFE OPERATION. REPLACE THESE COMPONENTS WITH SONY PARTS WHOSE PART NUMBERS APPEAR AS SHOWN IN THIS MANUAL OR IN SUPPLEMENTS PUBLISHED BY SONY.

SECTION 1
GENERAL

The operating instructions mentioned here are partial abstracts from the Operating Instruction Manual. The page numbers of the Operating Instruction Manual remain as in the manual.

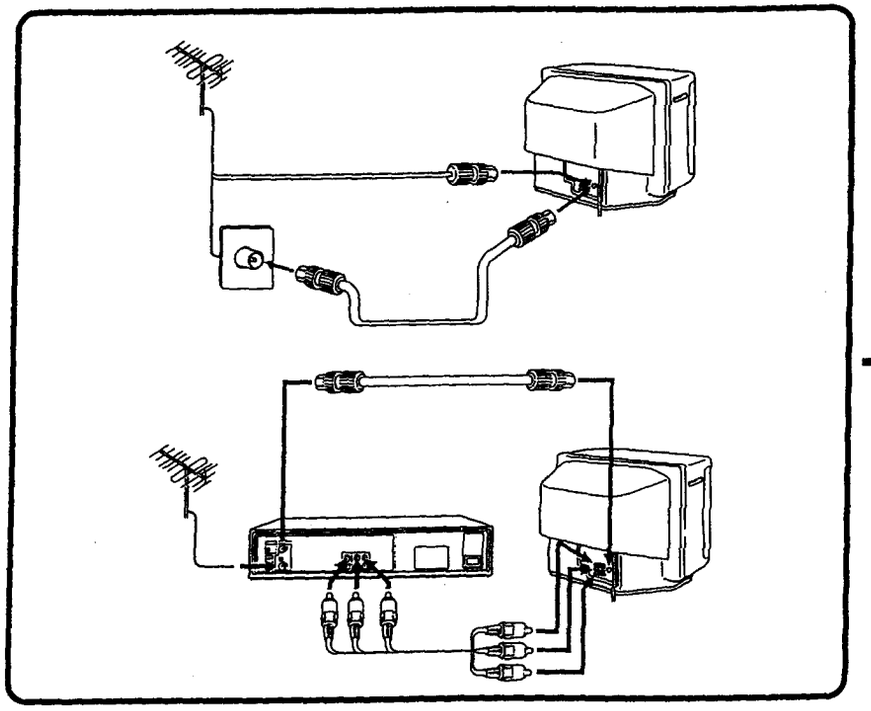

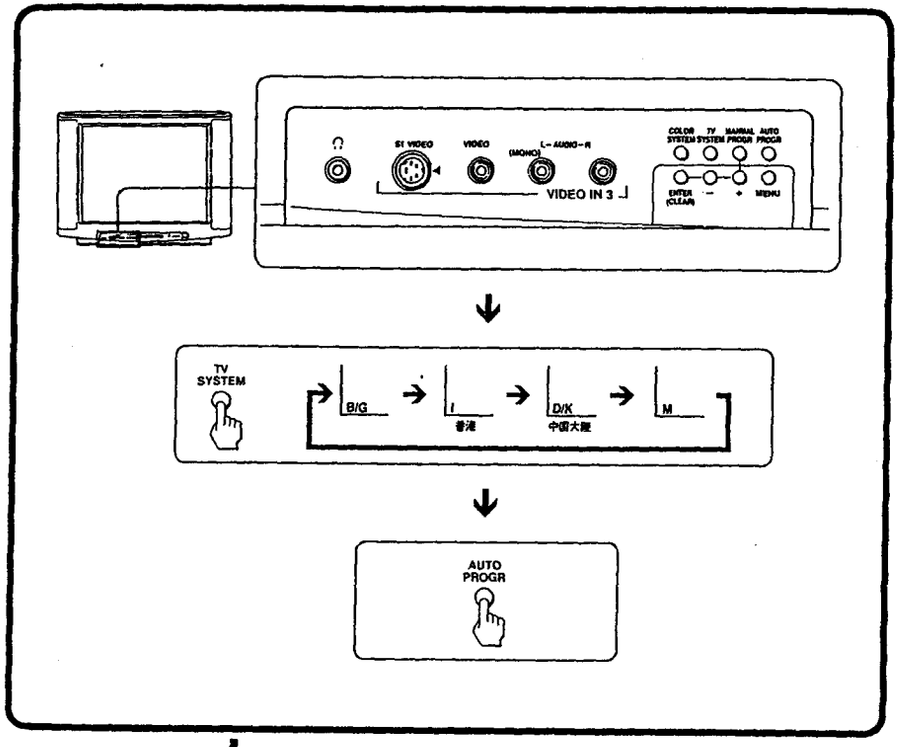

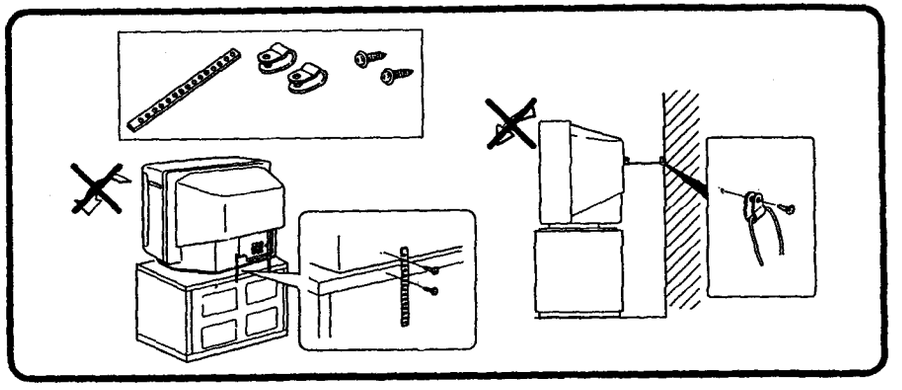

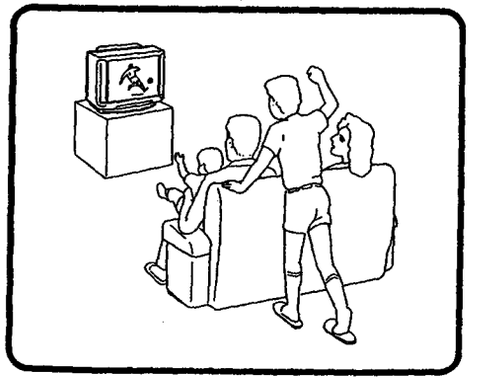

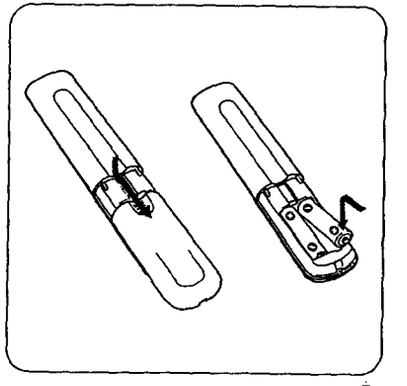

Connections

Connecting a VHF antenna or a combination VHF/UHF antenna — 75-ohm coaxial cable (round)

Attach an optional IEC antenna connector to the 75-ohm coaxial cable.
Plug the connector into the ℸ (antenna) socket at the rear of the TV.

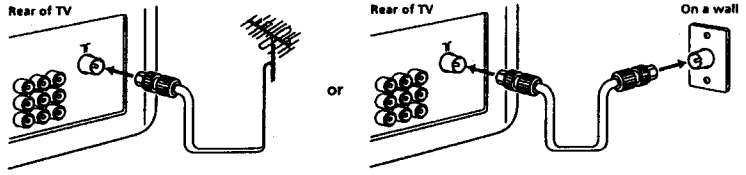

Connecting optional equipment

You can connect optional audio/video equipment to your TV such as a VCR, multi disc player, camcorder, headphones, or stereo system.

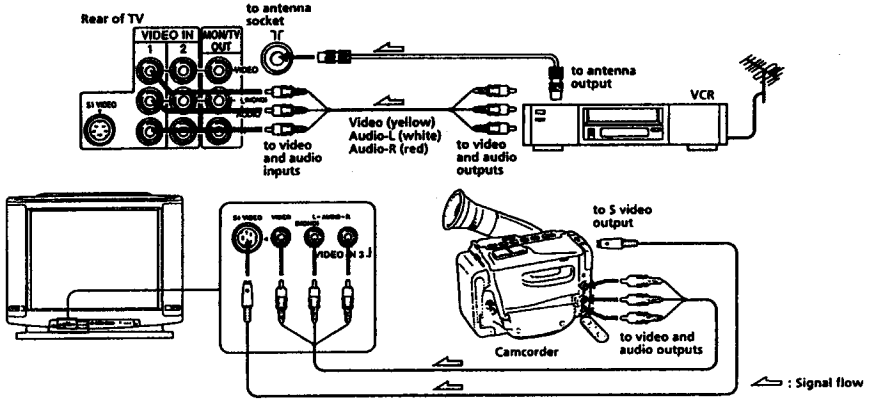

When connecting a monaural VCR
Connect the yellow plug to VIDEO and the black plug to AUDIO-L (mono).

When both S1-Video and video signals are input
The S1-Video input signal is selected. To view a video signal, disconnect the S1-Video connection.

Note on the S1-Video signal
When inputting the S1-Video signal through the VIDEO IN 1 or VIDEO IN 3 jack, turn wide mode OFF if you do not want to display the picture in wide mode (see page 19).

Note on the video input
When no signal is input, the screen becomes blue.

Presetting channels

You can preset TV channels easily by storing all the receivable channels automatically. You can also preset channels manually or disable program positions.

Presetting channels automatically

You can preset up to 100 TV channels in numerical sequence from program position 1.

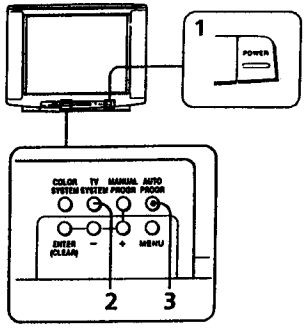

1 Press POWER.

When the TV is in standby mode after pressing POWER, press POWER on the remote commander.

2 Press TV SYSTEM to select your local TV system.

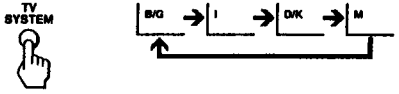

3 Press AUTO PROGR.

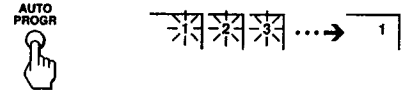

To start presetting channels automatically from the specified program position

1 Press MANUAL PROGR.
2 Press TV SYSTEM to select your local TV system.
3 Press PROGR +/– to select the program position.
4 Press AUTO PROGR.

Presetting channels manually

To change the program position for a channel or to receive a channel with a weak signal, preset the channel manually.

1 Press MANUAL PROGR.

2 Press PROGR +/– until the required program *position appears on the screen.*

3 Press *TV SYSTEM to select your TV system.*

4 Press + or – until the required channel picture appears on the screen.

5 Press MANUAL PROGR.

If the TV system is not properly selected
The color of the picture may be poor and/or the sound may be noisy. In this case, select the appropriate TV system.

1 Press PROGR +/– to select the program position.
2 Press TV SYSTEM until the picture and sound become normal.

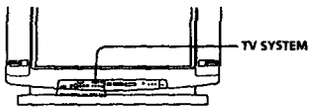

Note
- *The setting of the TV SYSTEM is memorized for each program position.*

Disabling program positions

By disabling unused or unwanted program positions, you can skip those positions when you press PROGR +/–.

1 Press PROGR +/– until the unused or unwanted program position appears on the screen.

2 Press MANUAL PROGR.

3 Press ENTER (CLEAR) on the TV.

4 Press MANUAL PROGR.

To cancel the skip setting
Preset the channel manually or automatically again.

Introducing the menu

You can use the on-screen menus to set the picture quality, sound, and other settings. You can use buttons on both the remote commander and the TV to operate the menus.

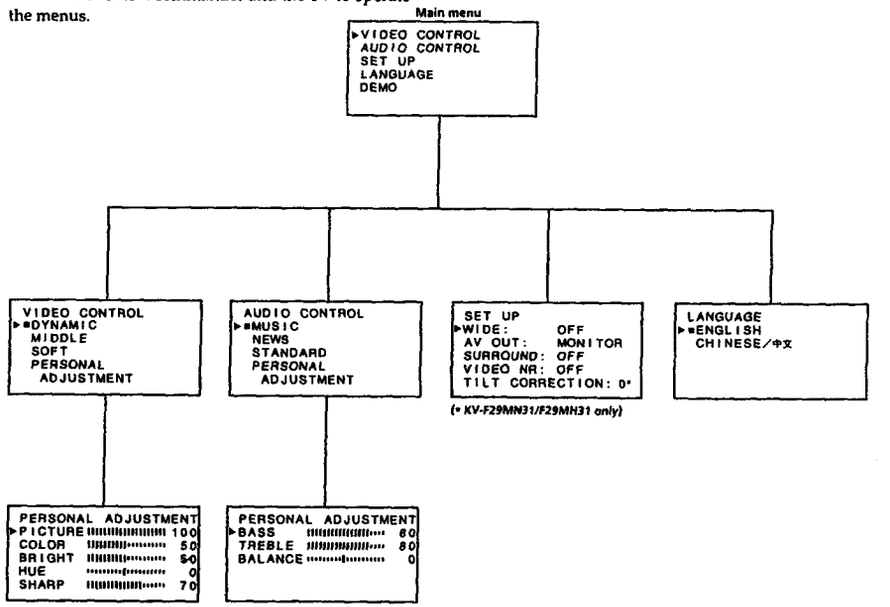

(* KV-F29MN31/F29MH31 only)

Getting back to the previous menu

Move the cursor (▶) up to the first line of each menu (except the main menu), and press ENTER.

Notes
- *If more than 60 seconds elapse after you press a button, the menu screen disappears automatically.*
- *You can display all of the features available for the TV in DEMO mode.*

Cancelling the menu screen

Press MENU.

Changing the menu language

If you prefer Chinese to English, you can change the menu language. You can use buttons on both the remote commander and the TV.

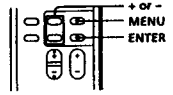

1 **Press MENU.**

2 **Press + or – to move the cursor (▶) to LANGUAGE.**

3 **Press ENTER.**

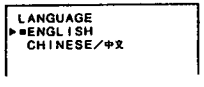

4 **Press + or – to select CHINESE.**

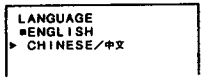

5 **Press ENTER.**

6 **Press MENU to return to the normal screen.**

Getting back to the English menu

1 **Press MENU.**

2 **Press + or – to move the cursor (▶) to the fourth line from the top ("语言/LANGUAGE").**

3 **Press ENTER.**

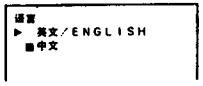

4 **Press ENTER.**

5 **Press MENU to return to the normal screen.**

Watching the TV

1 **Press POWER to turn the TV on.**

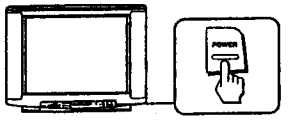

When the TV is in standby mode after pressing POWER, press POWER on the remote commander.

2 **Select the TV channel you want to watch.**

To select a channel directly

Press a number button.

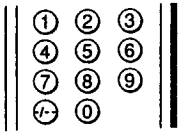

To select a two-digit channel, press "-/--" before the number buttons.

For example: to select channel 25, press "-/--," and then "2" and "5."

To scan through channels

Press PROGR/PAGE +/– until the channel you want appears.

3 **Press VOL +/– to adjust the volume.**

Switching off the TV

To switch off the TV temporarily, press POWER on the remote commander.

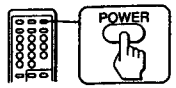

To switch off the TV completely, press POWER.
If the power on the TV is turned off in standby mode, the STANDBY indicator may remain alight for a while.

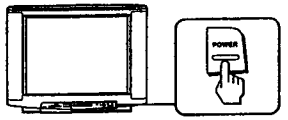

Watching the video input

Press VIDEO/HOLD.

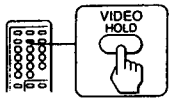

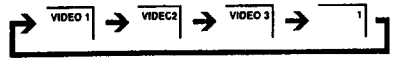

To watch TV, press TV.

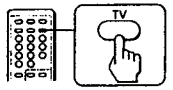

Muting the sound

Press MUTING.

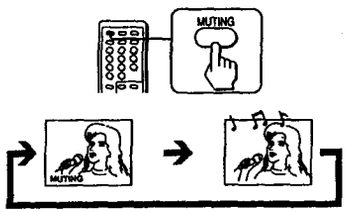

Displaying on-screen information

Press DISPLAY/REVEAL.
The program position, local system, and TV settings are displayed on the screen.

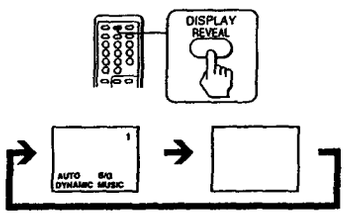

Setting the Sleep Timer

You can set the TV to turn off automatically after the period of time you set.

Press SLEEP/INDEX.

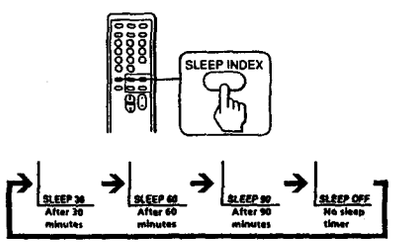

To cancel the Sleep Timer, press SLEEP/INDEX repeatedly until "SLEEP OFF" appears, or turn the TV off.

Adjusting the picture

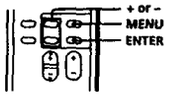

1 Press MENU.

```
▶VIDEO CONTROL
 AUDIO CONTROL
 SET UP
 LANGUAGE
 DEMO
```

2 Press + or – to move the cursor (▶) to VIDEO CONTROL.

```
▶VIDEO CONTROL
 AUDIO CONTROL
 SET UP
 LANGUAGE
 DEMO
```

3 Press ENTER.

```
 VIDEO CONTROL
▶■DYNAMIC
  MIDDLE
  SOFT
  PERSONAL
   ADJUSTMENT
```

4 Press + or – to select the setting, and press ENTER.

Select	To
DYNAMIC	Display more contrast picture
MIDDLE	Display normal contrast picture
SOFT	Display picture suitable for movies and video games
PERSONAL	Display the picture that is adjusted using *ADJUSTMENT*
ADJUSTMENT	Make specific adjustments. See "Adjusting the picture setting."

5 Press MENU to return to the normal screen.

Adjusting the picture setting (ADJUSTMENT)

You can adjust the picture to your own taste with the ADJUSTMENT option. The adjusted settings are stored in the PERSONAL option.

1 Press MENU.

2 Press + or – to move the cursor (▶) to VIDEO CONTROL, and press ENTER.

3 Press + or – to move the cursor (▶) to *ADJUSTMENT*, and press ENTER.

4 Press + or – to move the cursor (▶) to the item you want to adjust, and press ENTER.

```
 PERSONAL ADJUSTMENT
▶PICTURE ||||||||||||||||| 100
 COLOR   ||||||||||||||||  50
 BRIGHT  ||||||||||||||||  50
 HUE     ||||||||||||||||   0
 SHARP   ||||||||||||||||  70
```

5 Press + or – to adjust the item, and press ENTER.

Item	Press + to	Press – to
PICTURE	Increase picture contrast	Decrease picture contrast
COLOR	Increase color intensity	Decrease color intensity
BRIGHT	Brighten the picture	Darken the picture
HUE	Make skin tones become greenish	Make skin tones become reddish
SHARP	Sharpen the picture	Soften the picture

6 To adjust other items, repeat steps 4 and 5.

7 Press MENU to return to the normal screen.

Note
- You can adjust HUE for NTSC color system only.

If the color of the picture is abnormal
When receiving programs through the 𝕋 terminal: Press TV SYSTEM or COLOR SYSTEM until the color becomes normal.

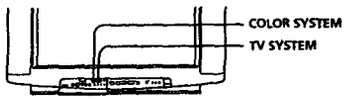

Note
- Normally set COLOR SYSTEM to AUTO.

Adjusting the sound

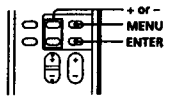

1 **Press MENU.**

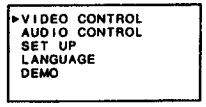

2 **Press + or – to move the cursor (▸) to AUDIO CONTROL.**

3 **Press ENTER.**

4 **Press + or – to select the sound that you want, and press ENTER.**

Select	To
MUSIC	Listen to music programs.
NEWS	Listen to news program. A person's voice can be heard clearly.
STANDARD	Listen to sound other than music or news.
PERSONAL	Listen to the sound that is adjusted using ADJUSTMENT.
ADJUSTMENT	Make specific settings. See "Adjusting the sound setting."

5 **Press MENU to return to the normal screen.**

Adjusting the sound setting (ADJUSTMENT)

You can adjust the sound to your own taste with the ADJUSTMENT option. The adjusted settings are stored in the PERSONAL option.

1 **Press MENU.**

2 **Press + or – to move the cursor (▸) to AUDIO CONTROL, and press ENTER.**

3 **Press + or – to move the cursor (▸) to ADJUSTMENT, and press ENTER.**

4 **Press + or – to move the cursor (▸) to the item you want to adjust, and press ENTER.**

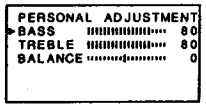

5 **Press + or – to adjust the item, and press ENTER.**

Item	Press + to	Press – to
BASS	Increase the bass sound	Decrease the bass sound
TREBLE	Increase the treble sound	Decrease the treble sound
BALANCE	Increase the volume of right speaker	Increase the volume of left speaker

6 **To adjust other items, repeat steps 4 and 5.**

7 **Press MENU to return to the normal screen.**

If the sound is distorted or noisy
When receiving programs through the Ψ terminal:
Press TV SYSTEM until the sound becomes clear.

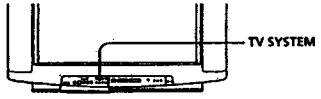

Viewing Teletext

TV stations broadcast an information service called Teletext via a TV channel.
Teletext service allows you to receive various information such as weather forecasts or news at any time you want.

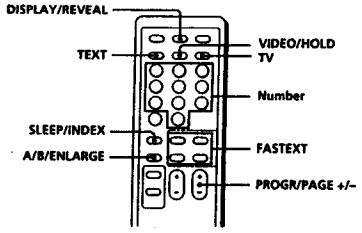

Displaying Teletext

1 **Select a TV channel which carries the Teletext broadcast you want to watch.**

2 **Press TEXT to display the Teletext.**
A Teletext page is displayed (normally the index page). If there is no Teletext broadcast, P100 is displayed at the top left corner of the screen.

To cancel the Teletext display, press TV.

Superimposing a Teletext page on the TV picture

Press TEXT.
Each time you press TEXT, the screen changes as follows:

Teletext → Teletext and TV → TV

Checking the contents of a Teletext service (INDEX)

Press SLEEP/INDEX to display an overview of the Teletext contents and page numbers.

Using FASTEXT

This feature allows you to quickly access a Teletext page that uses FASTEXT. When a FASTEXT page is broadcast, a color-coded menu appears at the bottom of the screen. The colors of the menu correspond to the RED, GREEN, YELLOW, and CYAN buttons on the remote commander. These color buttons function as the FASTEXT buttons in Teletext mode.

Press the color button which corresponds to the color-coded menu.
The page is displayed after a few seconds.

Selecting a Teletext page

To input the three-digit page number of the Teletext page, press the number buttons.
If you make a mistake, key in the correct page number again.

To access the next or previous page, press PROGR/PAGE +/–.

Holding a Teletext page

A Teletext page may consist of several subpages. You can stop the page scrolling in order to read the text at your own pace.

Press VIDEO/HOLD.
The HOLD symbol "⊕" is displayed at the top left corner of the screen.

To resume normal Teletext operation, press TEXT.

Customizing the TV (SET UP)

Turning wide mode

When receiving the signal conforming to wide mode (S1-Video signal), you can change the size of the picture on the screen.

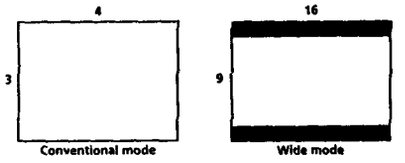

1 **Press MENU.**

2 **Press + or – to select SET UP, and press ENTER.**

```
SET UP
▶WIDE:      OFF
 AV OUT:    MONITOR
 SURROUND: OFF
 VIDEO NR: OFF
```

3 ***Press + or – to select WIDE, and press ENTER.***

4 **Press + or – to select the wide mode to suit *the size of the picture you want to display* on the TV screen.**

Select	To
ON	Display the picture on the screen in wide mode
AUTO	Display the picture on the screen in wide mode automatically when receiving the S1-Video signal through the S1-Video input jack
OFF	Display the picture on the screen in conventional size

Note

- When the picture is in wide mode, the bright lines which are used for adjusting the CRT at optimum level appear at the top of the screen.

Using the AV OUT (advanced rec-out) terminal

You can select the output signal from the MON/TV OUT jacks at the rear of the TV.

1 **Press MENU.**

2 ***Press + or – to select SET UP, and press ENTER.***

```
SET UP
▶WIDE:      OFF
 AV OUT:    MONITOR
 SURROUND: OFF
 VIDEO NR: OFF
```

3 ***Press + or – to select AV OUT, and press ENTER.***

4 **Press + or – to select the output signal, and press ENTER.**

Select	To
TV	Output the TV signal.
MONITOR	Output the signal of the picture you are watching as a monitor.

Note

- Do not change the channel while recording with a VCR through the MON/TV OUT jacks. If you change the channel, it also changes the channel you are recording.

Selecting the surround sound

You can enjoy a surround sound effect that is like being in a music hall when receiving stereo signals.

1 **Press MENU.**

2 **Press + or – to select SET UP, and press ENTER.**

```
SET UP
▶WIDE:      OFF
 AV OUT:    MONITOR
 SURROUND: OFF
 VIDEO NR: OFF
```

3 **Press + or – to select SURROUND, and press ENTER.**

4 **Press + or – to turn the surround sound on or off, and press ENTER.**

Select	To
ON	Listen to surround sound that is effective for stereo signals
SPACE	Listen to surround sound that is effective for monaural signals
OFF	Turn off surround sound

Reducing the noise of the picture

You can reduce the noise level of the picture when the TV receives a weak signal or when you play a videotape that is in poor condition.

1 **Press MENU.**

2 **Press + or – to select SET UP, and press ENTER.**

```
SET UP
▶WIDE:      OFF
 AV OUT:    MONITOR
 SURROUND: OFF
 VIDEO NR: OFF
```

3 **Press + or – to select VIDEO NR, and press ENTER.**

4 ***Press + or – to turn the noise reduction on or off, and press ENTER.***

Adjusting the tilt of the picture

You can adjust the tilt of the picture if it is not aligned to the TV screen. This may happen due to the direction of the earth's magnetic field in relation to the position of the TV.

1 **Press MENU.**

2 **Press + or – to select SET UP, and press ENTER.**

```
SET UP
▶WIDE:      OFF
 AV OUT:    MONITOR
 SURROUND: OFF
 VIDEO NR: OFF
 TILT CORRECTION: 0
```

3 **Press + or – to select *TILT CORRECTION*, and press ENTER.**

4 **Press + or – to select the most suitable value to align the picture position.**

TILT CORRECTION : –3 ← –2 ← –1 ← 0 → +1 → +2 → +3
(– / +)

Troubleshooting

If you have any problems, read this manual again and check the countermeasure for each of the symptoms listed below.
If the problem persists, contact your nearest authorized service center or dealer.

Snowy picture
Noisy sound

➡Check the antenna.
➡Check the antenna connection on the TV and on the wall.
➡Check the TV system setting.

Dotted lines or stripes

➡This may be caused by local interference (e.g. cars, neon signs, hair dryers, etc.). Adjust the antenna for minimum interference.

Double images or "ghosts"

➡This may be caused by reflections from nearby mountains or buildings. A highly directional antenna may improve the picture.

Good picture
Noisy sound

➡Check the TV SYSTEM setting.

No picture
No sound

➡Press POWER.
➡Check the antenna connection.
➡Check the VCR connections.

Good picture
No sound

➡Press VOLUME +.
➡Press MUTING.
➡Press A/B/ENLARGE.

No color

➡Adjust the COLOR level in the VIDEO CONTROL menu's ADJUSTMENT option.
➡Check the COLOR SYSTEM setting.

TV cabinet creaks

➡Even if the picture or the sound is normal, changes in the room temperature sometimes make the TV cabinet expand or contract, making a noise. This does not indicate a malfunction.

SECTION 2
DISASSEMBLY

2-1. REAR COVER REMOVAL

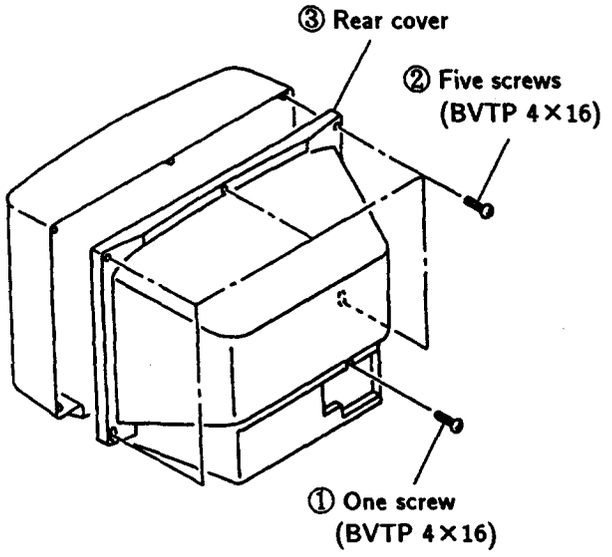

(KV-F25MF1J)

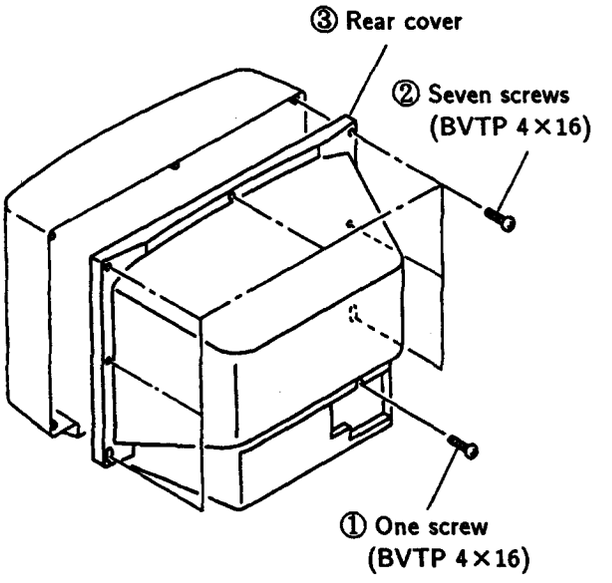

(KV-F29MF1J/F29SF11)

2-2. CHASSIS ASSY REMOVAL

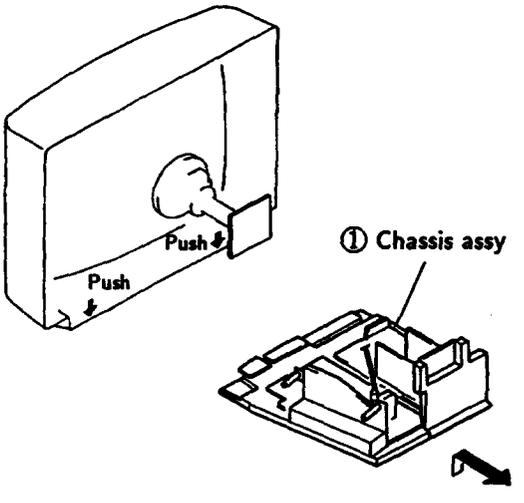

2-3. SERVICE POSITION

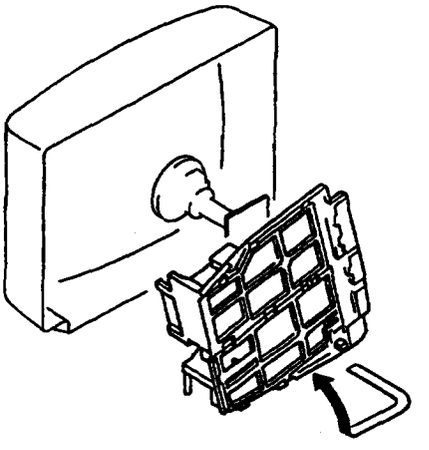

2-4. EXTENSION CABLE

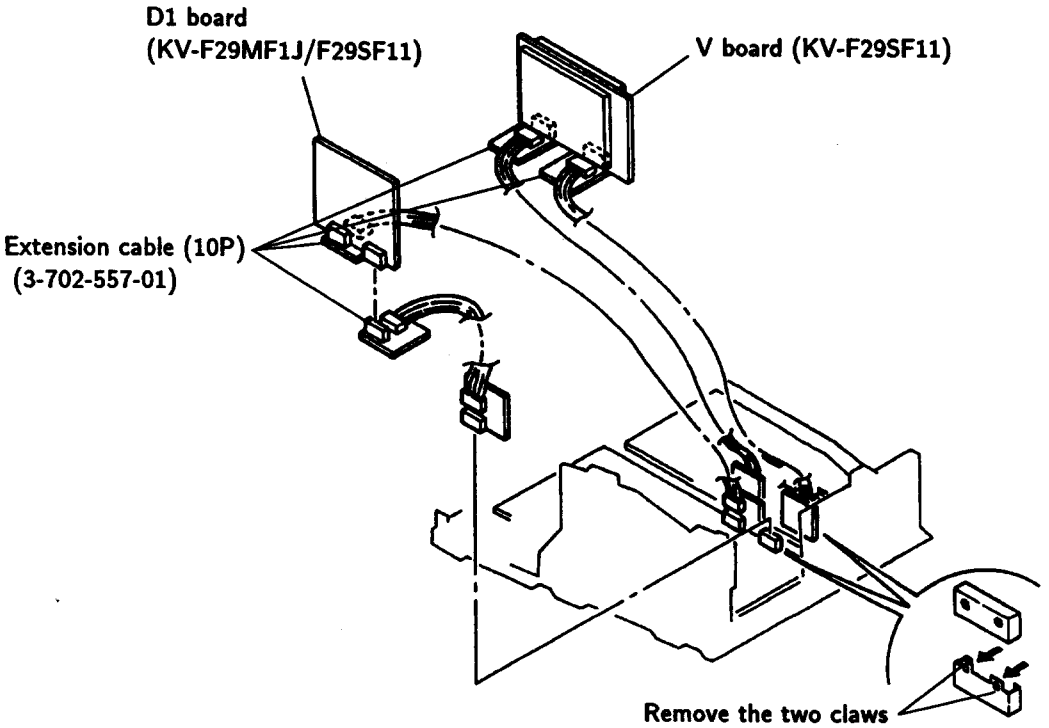

2-5. DEMAGNETIZATION COIL REMOVAL

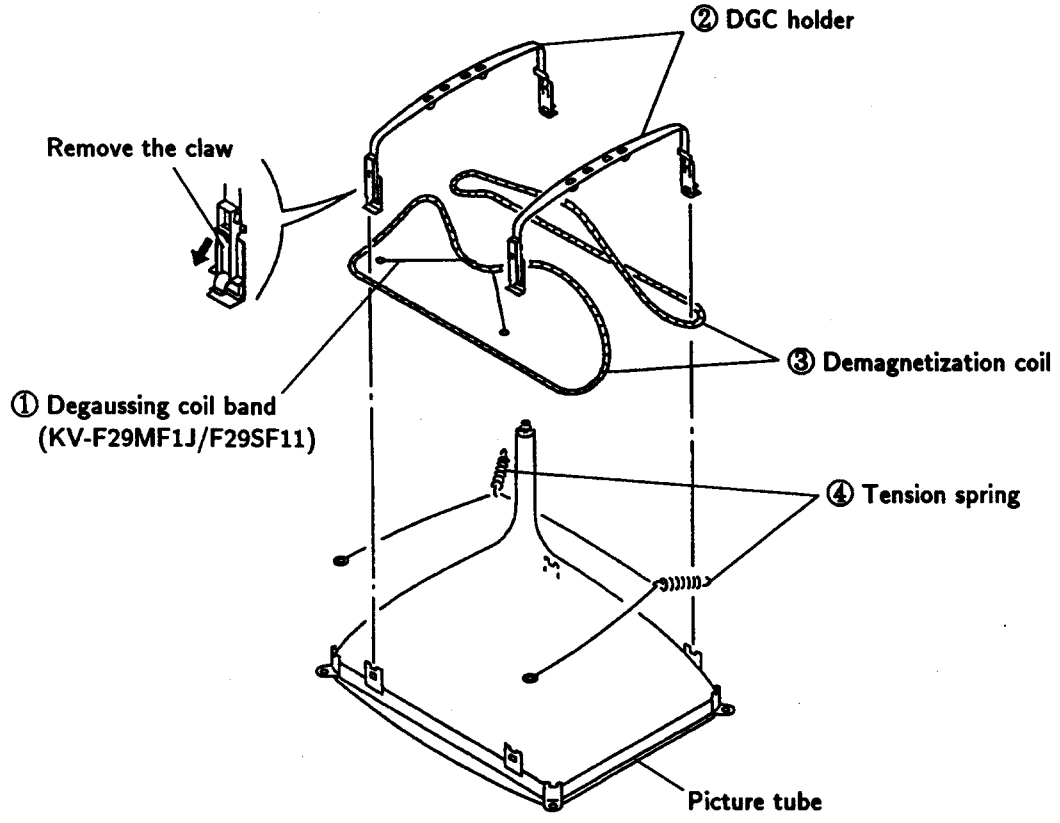

2-6. PICTURE TUBE REMOVAL

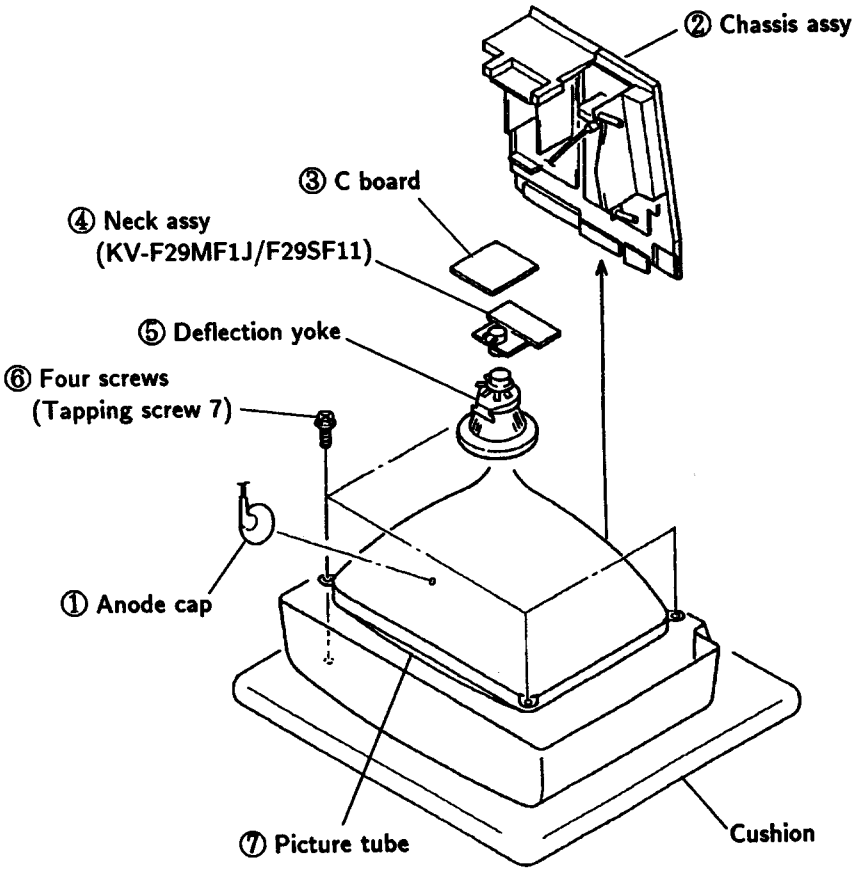

• REMOVAL OF ANODE-CAP

NOTE : Short circuit the anode of the picture tube and the anode cap to the metal chassis, CRT chield or carbon painted on the CRT, after removing the anode.

• REMOVING PROCEDURES

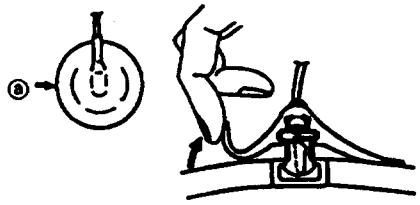

① Turn up one side of the rubber cap in the direction indicated by the arrow ⓐ.

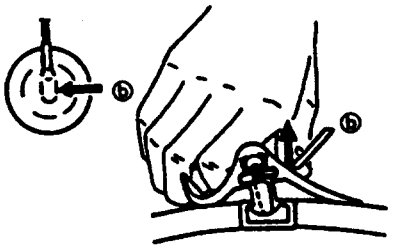

② Using a thumb pull up the rubber cap firmly in the direction indicated by the arrow ⓑ.

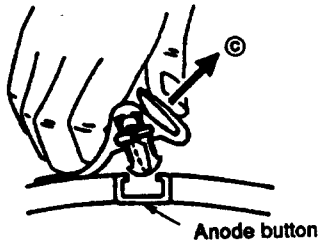

③ When one side of the rubber cap is separated from the anode button, the anode-cap can be removed by turning up the rubber cap and pulling up it in the direction of the arrow ⓒ.

• HOW TO HANDLE AN ANODE-CAP

① Don't hurt the surface of anode-caps with sharp shaped material!

② Don't press the rubber too hard in order not to hurt inside of anode-caps!
A material fitting called as shatter-hook terminal is built in the rubber.

③ Don't turn the foot of rubber over hard!
The shatter-hook terminal will stick out or hurt the rubber.

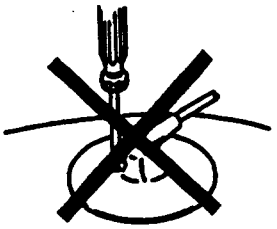

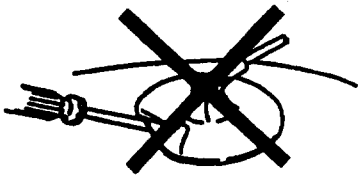

SECTION 3
SET-UP ADJUSTMENTS

- The following adjustments should be made when a complete realignment is required or a new picture tube is installed.
- These adjustments should be performed with rated power supply voltage unless otherwise noted.

Controls and switch should be set as follows unless otherwise noted:

PICTURE control ..... RESET

BRIGHTNESS control ..... CENTER

Perform the adjustments in order as follows :

1. Beam Landing
2. Convergence
3. Focus
4. White Balance

Note : Test Equipment Required.

1. Color-bar/Pattern Generator
2. Degausser
3. Oscilloscope

Preparations :

- In order to reduce the influence of geomagnetism on the set's picture tube face it east or west.
- Switch on the set's power and degauss with the degausser.

3-1. BEAM LANDING

1. Input the white signal with the pattern generator.
   Contrast } normal
   Bightness }
2. Position neck ass'y as shown in Fig 3-2.
3. Set the pattern generator raster signal to red.
4. Move the deflection yoke to the rear and adjust with the purity control so that the red is at the center and the blue and the green take up equally sized areas on each side.
   (See Figures 3-1 through 3-3.)
5. Move the deflection yoke forward and adjust so that entire screen is red. (See Figure 3-1.)
6. Switch the raster signal to blue, then to green and verify the condition.
7. When the position of the deflection yoke has been decided, fasten the deflection yoke with the screws.
8. If the beam does not land correctly in all the corners, use a magnet to adjust it.
   (See Figure 3-4.)

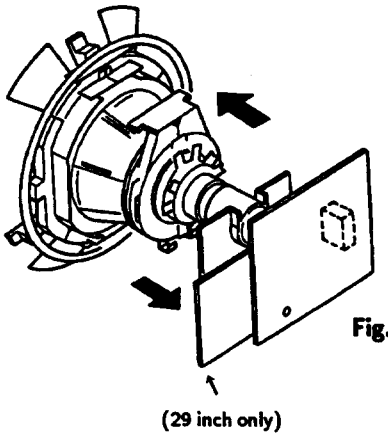

Fig.3-1

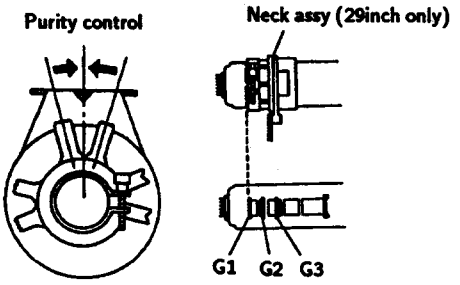

Fig.3-2

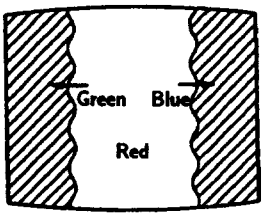

Fig.3-3

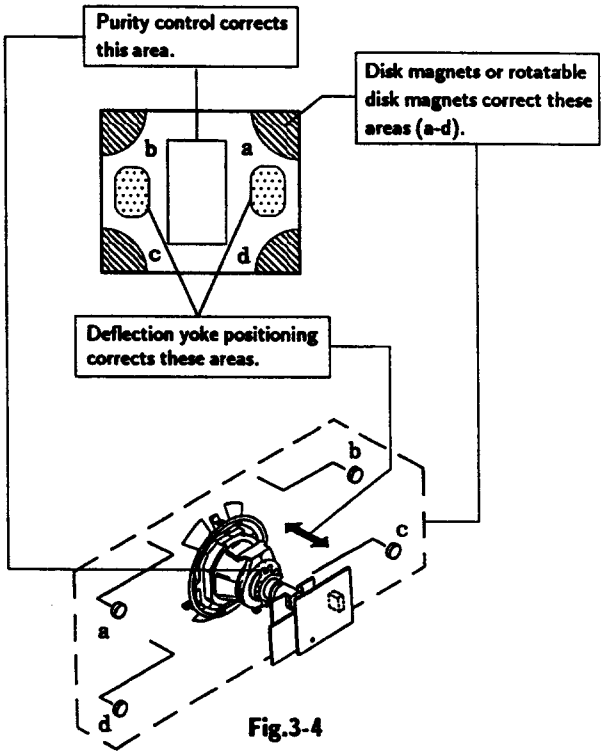

Fig.3-4

3-2. CONVERGENCE

Preparation :

- Before starting this adjustment, adjust the focus, horizontal size, and vertical size.
- Minimize the brightness setting.
- Proyide dot pattern.

(1) Horizontal and Vertical Static Convergence

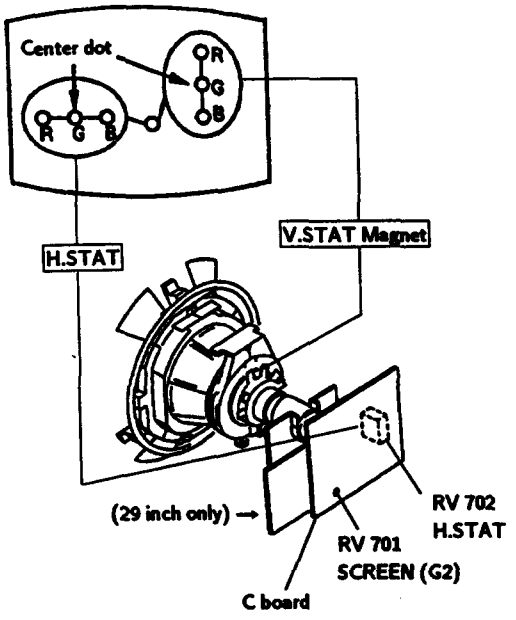

1. (Moving horizontally), adjust the H.STAT control so that the red, green, and blue points are on top of each other at the center of the screen.
2. (Moving vertically), adjust the V.STAT magnet so that the red, green, and blue points are on top of each other at the center of the screen.
3. If the H.STAT variable resistor cannot bring the red, green, and blue points together at the center of the screen, adjust the horizontal convergence with the H.STAT variable resistor and the V. STAT magnet in the manner given below. (In this case, the H.STAT variable resistor and the V.STAT magnet influence each other)

- Tilt the V.STAT magnet and adjust the static convergence by opening or closing the V.STAT magnet.

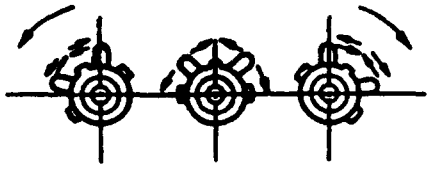

4. If the V.STAT magnet is moved in the direction of the ⓐ and ⓑ arrows, the red, green, and blue points move as shown below.

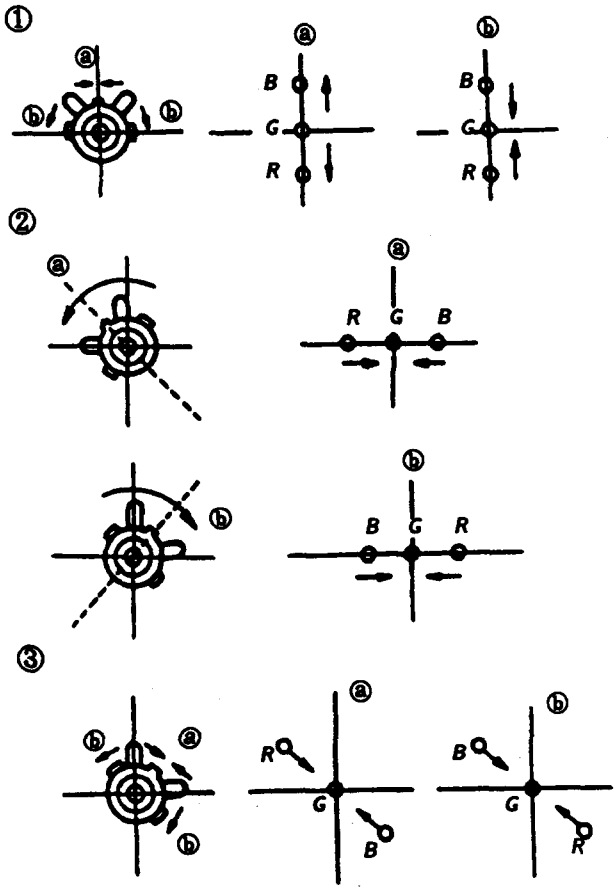

- Operation of BMC (Hexapole) Magnet

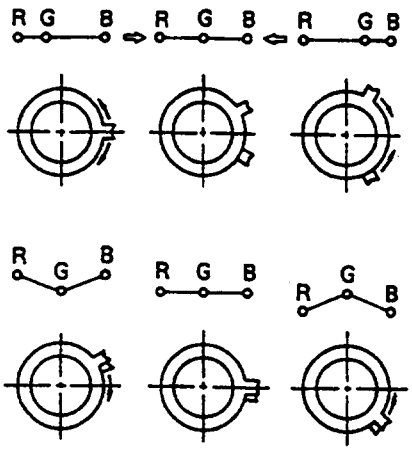

- The respective dot positions resulting from moving each magnet interact, so be sure to perform adjustment while tracking.
  Use the H.STAT VR to adjust the red, green, and blue dots so they coincide at the center of screen (by moving the dots in the horizontal direction).

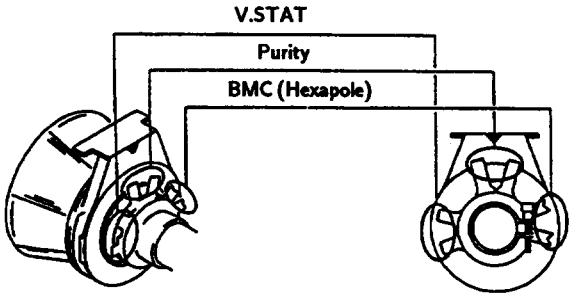

• Y separation axis correction magnet adjustment

1. Receive the cross-hatch signal, and adjust [PIC] to "MIN" and [BRT] to "standard".
2. Adjust the deflection yoke to the upright condition when it hits the CRT.
3. Adjust so that the Y separation axis correction magnet on the neck assembly is symmetrical at the top and bottom (open state).
4. Return the deflection yoke to its original position.

(2) Dynamic Convergence Adjustment

Preparations :

- Before starting this adjustment, adjust the horizontal static convergence and the vertical static convergence.

1. Slightly loosen the deflection yoke screws.
2. Remove the deflection yoke spacer.
3. Move the deflection yoke as shown in the figure below and optimize the convergence.
4. Tighten the deflection yoke screws.
5. Install the defelection yoke spacer.

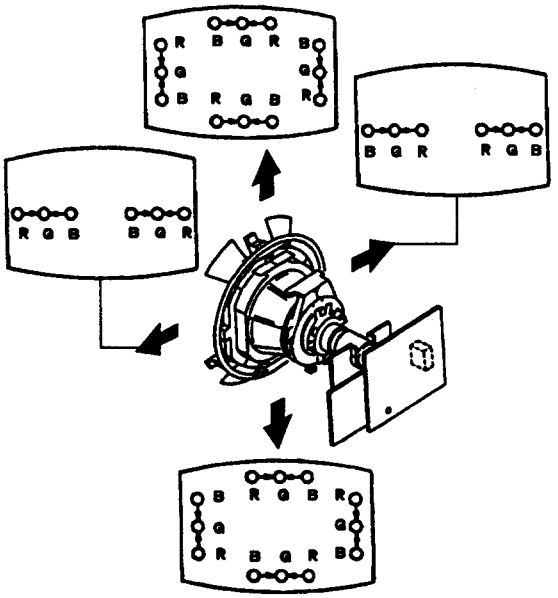

(3) Screen-corner Conbergence

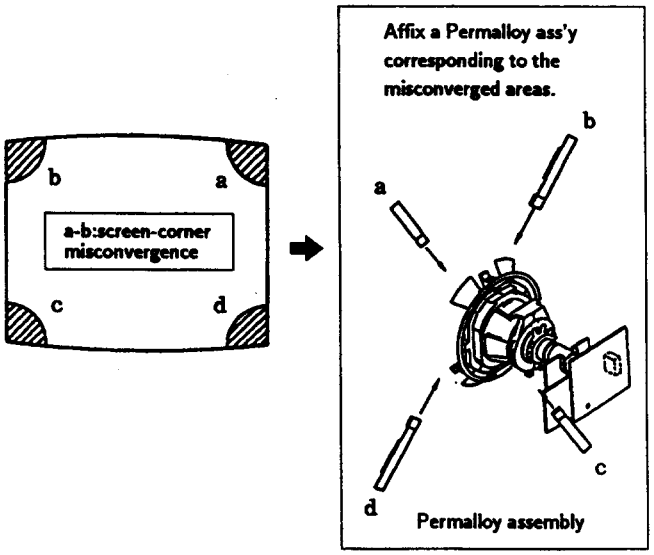

3-3. FOCUS ADJUSTMENT

Adjust FOCUS control on the flyback transformer for a best focus.

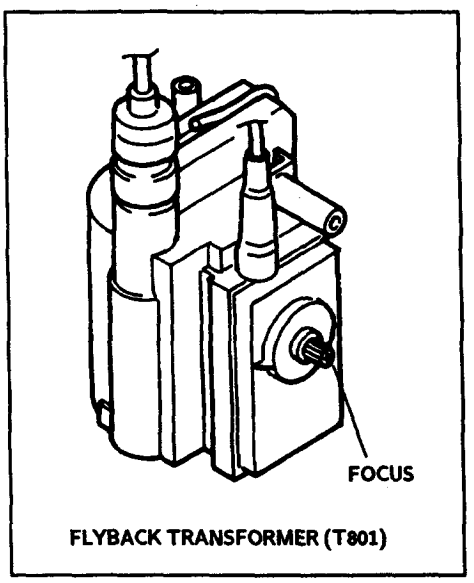

FLYBACK TRANSFORMER (T801)

a. AN ITEM OF ADJUSTMENT

Item number	Adjustment item	Standard DATA				Note
		50 Hz		60 Hz		
		Normal	Wide	Normal	Wide	
05	SBR	1F	1F	1F	1F	SUB-BRIGHTNESS
07	GDR	1F				G Drive
08	BDR	1F				B Drive
09	GCT	07				G CUT-OFF
0A	BCT	07				B CUT-OFF

b. METHOD OF CANCELLATION FROM SERVICE MODE

Set the standby condition (Press POWER button on the commander) in the next place, press POWER button again, hereupon it becomes TV mode.

c. METHOD OF WRITE FOR MEMORY

1) Set to Service Mode.
2) Press 1 (UP) and 4 (DOWN), select an item of adjustments.
3) Press MUTE button indicate WRITE (RED) on screen.
4) Press 0 button to write into memory.

d. MEMORY WRITE CONFIRMATION METHOD

1) After adjustment, pull out the plug from AC outlet, and next place, plug in AC outlet again.
2) Turn the power switch ON and set to Service Mode.
3) Call the adjusted items again, confirm they were adjusted.

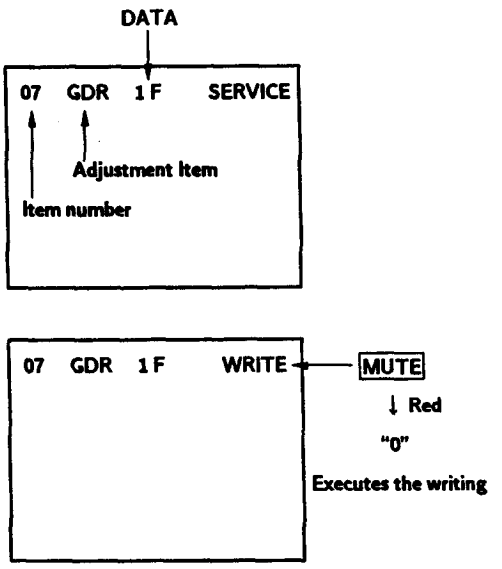

3-4. G2 (SCREEN) AND WHITE BALANCE ADJUSTMENTS

1. G2 (SCREEN) ADJUSTMENT (RV701)

1) Set the PICTURE and BRIGHTNESS to normal.
2) Put to VIDEO input mode without signals.
3) Set to Service Mode.
4) Change BLU data of the item number "4F" from "01" to "00". (To turn off Blue Black.)
5) Press [MUTE], and [0] to write the data in the memory.
6) Connect R, G, and B of the C board cathode to the oscilloscope.
7) Adjust G2 (RV701) volume to the value below.

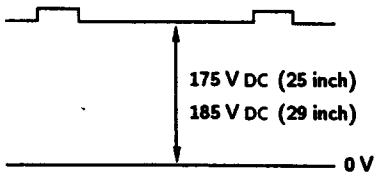

8) Re-set BLU data of the item number "4F" from "00" back to "01".
9) Press [MUTE], and [0] to write the data in the memory.

2. WHITE BALANCE ADJUSTMENTS

1) Set to service mode.
2) Input an entire white signal.
3) Set the PICTURE to minimum.
4) Select SBR (05) with [1] and [4], and then set the level to minimum with [3] and [6].
5) Select GCT (09) and BCT (0A) with [1] and [4]. And adjust the level with [3] and [6] for the best white balance.
6) Set the PICTURE to maximum.
7) Select GDR (07) and BDR (08) with [1] and [4], and adjust the level with [3] and [6] for the best white balance.
8) Write into the memory by pressing [MUTE] → then [0].

3. SUB BRIGHT ADJUSTMENT

1) Set to service mode.
2) Input a staircase signal of black and white from the pattern generator.
3) BRIGHTNESS ··· RESET
   PICTURE ····· minimum
4) Select SBR(05) with [1] and [4], and adjust SBR level with [3] and [6] so that the stripe second from the right is dimly lit.

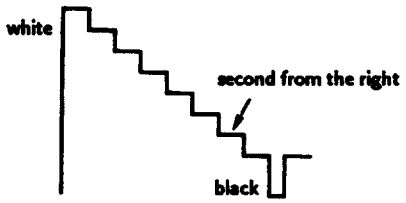

SECTION 4
SELF DIAGNOSIS FUNCTION

If no acknowledgement is returned from a device which is turned "ON", the device has a problem.
In this case, one of the LED's responding to the problem device will flicker defined number of times.

Flickering is operated by lighting the LED's for 60ms and turning them off for 600ms.

The flickering frequency responding to each failed device is shown below.

Device	NONVOLATILE MEMORY	AV SWITCH (CXA1545S)	MAIN Y/C (TDA9145)	RGB JUNGLE (CXA1587)	DY DSP (CXD2018)	SURROUND PROCESSOR (TA8776N)
Flickering Frequency	1	2	3	4	5	6

All the devices are checked one after another from the left on the table.
If an error is found, the responding LED will start flickering.
So, if more than 2 devices are failed, the one on the left side will start flickering first.

SECTION 5
CIRCUIT ADJUSTMENTS

5-1. ADJUSTMENTS WITH COMMANDER

Service adjustments are made with the RM-857 that comes with this unit.

Entering service mode

With the unit on standby

↓

"DISPLAY"

↓

"5"

↓

"VOL (+)"

↓

"POWER"

This operation sequence puts the unit into servise mode.

"1", "4"	Raise/lower the service item number
"3", "6"	Raise/lower the data
"MUTE"	Writes
"0"	Executes the writing

"7", "0"	The data all becomes the values in memory
"8", "0"	User control all goes to the standard state
"5", "0"	Service data initialization (Be sure not to use usually.)
"2", "0"	Write 50Hz adjustment data to 60Hz, or vice versa.

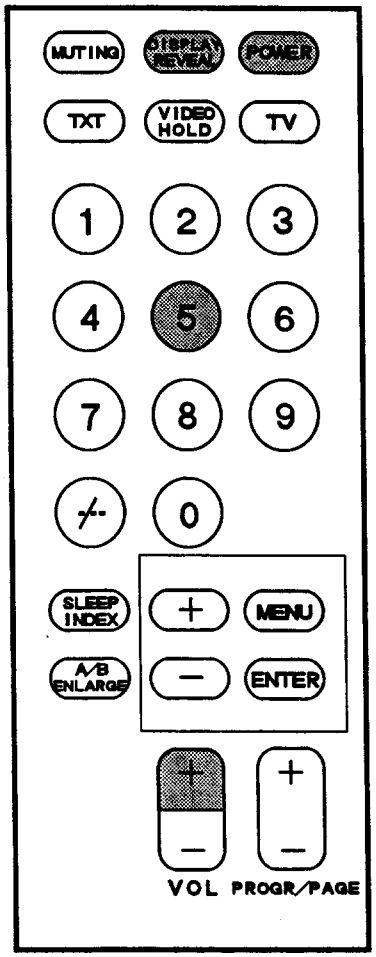

RM-857

The screen display is :

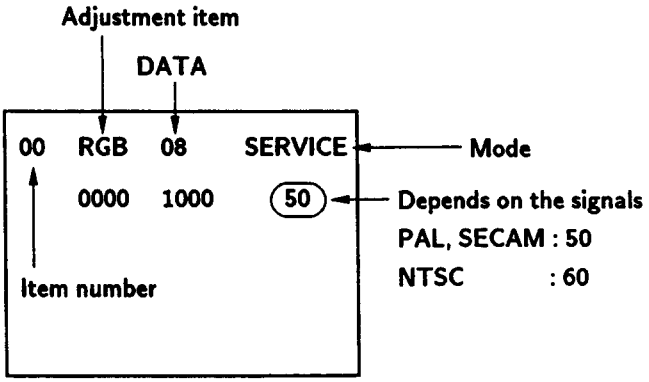

"1", "4"	Select the adjustment item.
↓	
"3", "6"	Raise/lower the data.
↓	
"MUTE"	Writes
↓	
"0"	Executes the writing.

5-2. ADJUSTMENT METHOD

Item Number 24

This explanation uses V-SHFT as an example.

1. Select 24 V-SHFT with the "1" and "4" buttons.
2. Raise/lower the data with the "3" and "6" buttons.
3. Select the optimum state. (The standard is 0F for PAL reception.)
4. Write with the MUTE button. (The display changes to green WRITE.)
5. Execute the writing with the "0" button. (The WRITE display changes briefly to red.)

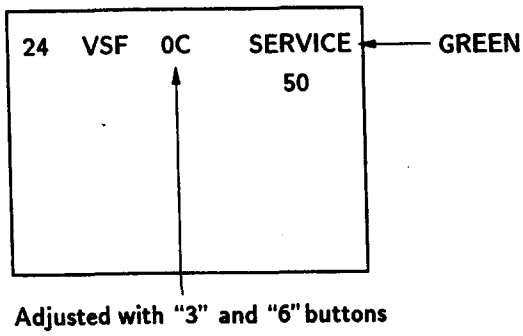

Adjusted with "3" and "6" buttons

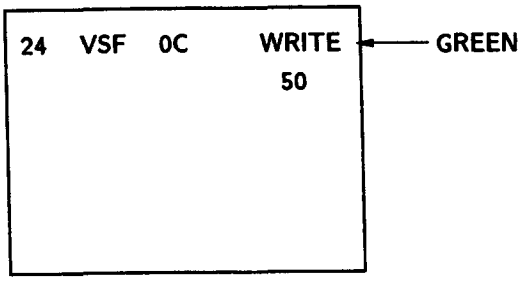

Written with "MUTE"

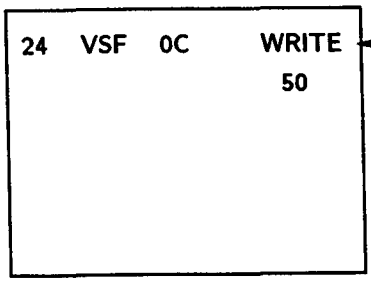

The WRITE display changes briefly to red, then the display returns to a green SERVICE.

Write excuted with "0"

Use the same method for Items Number 00-56. Use "1" and "4" to select the adjustment item, use "3" and "6" to adjust, write with "MUTE", then execute the write with "0".

Note : In "WRITE", the data of all items are written together to memory.

Note : In item 02 50Hz, or item 03 60Hz, it operates normally in spite of the 50Hz or the 60Hz of the input signal. Therefore be sure to adjust data according to the input signal.

Item number	Adjustment Item	Data range	Standard DATA				Note	Device
			50 Hz		60 Hz			
			Normal	Wide	Normal	Wide		
00	RGB	00~0F	07	07	07	07	RGB PICTURE	(CXA1587S)
01	SCN	00~0F	08	06	08	06	SUB-Contrast	(CXA1587S)
02	VM	00~03	02	02	02	02	VM Level	(CXA1587S)
03	SCL	00~0F	08	07	08	07	SUB-COLOR	(CXA1587S)
04	SHU	00~0F	08	08	08	08	SUB-HUE	(CXA1587S)
05	SBR	00~3F	1F	1F	1F	1F	SUB-BRIGHTNESS	(CXA1587S)
06	ABL	00~03	03	03	03	03	ABL Mode	(CXA1587S)
07	GDR	00~3F	1F				G Drive	(CXA1587S)
08	BDR	00~3F	1F				B Drive	(CXA1587S)
09	GCT	00~0F	07				G CUT-OFF	(CXA1587S)
0A	BCT	00~0F	07				B CUT-OFF	(CXA1587S)
0B	AKR	00~FF	7F				AKB OFF R CUT-OFF	(CXA1587S)
0C	AKG	00~FF	7F				AKB OFF G CUT-OFF	(CXA1587S)
0D	AKB	00~FF	7F				AKB OFF B CUT-OFF	(CXA1587S)
			50 Hz		60 Hz			
0E	GMA	00~0F	0C		0C		γ control	(CXA1587S)
0F	DCT	00~03	00		00		DC TRAN	(CXA1587S)
10	DPI	00~03	03		03		D-PIC	(CXA1587S)
11	YFI	00~3F	22		22		Y Filter Adjust	(CXA1587S)
12	SHL	00~01	01		01		SHP-LIM	(CXA1587S)
13	YDL	00~0F	0F		07		Y Delay Time	(CXA1587S)
14	YSW	00~03	01		01		Y-SW OUT	(CXA1587S)
15	HSH	00~3F	23		2A		H Shift	(CXA1587S)
			5 T	5 V	6 T	6 V		
16	POV	00~0F	08	08	08	08	Pre-Over	(CXA1587S)
17	SHF	00~03	02	02	02	02	SHP-F0	(CXA1587S)
18	SSH	00~03	01	02	02	03	SUB-Sharpness	(CXA1587S)
19	RMT	00~01	00				R-Mute	(CXA1587S)
1A	GMT	00~01	00				G-Mute	(CXA1587S)
1B	BMT	00~01	00				B-Mute	(CXA1587S)
1C	AG 1	00~01	00				Aging 1 (White)	(CXA1587S)
1D	AKF	00~01	00				AKB-OFF	(CXA1587S)
			TV		Video			
1E	SMD	00~01	00		00		Scan Mode	(CXA1587S)
1F	VEX	00~01	00		00		V-Extension	(CXA1587S)
20	AFC	00~03	03		02		AFC Loop Gain	(CXA1587S)
21	AFF	00~01	00		00		AFC-OFF	(CXA1587S)
22	RFP	00~01	00		00		Reference Position	(CXA1587S)
23	VSZ	00~3F	1E	1E	1A	1A	V-Size	(CXD2018Q)
24	VSF	00~3F	2E	2E	32	32	V-Shift	(CXD2018Q)
25	SCR	00~F	08	08	08	08	S-Correction	(CXD2018Q)
26	VLN	00~F	08	08	08	08	V-Linearity	(CXD2018Q)
27	HSZ	00~3F	0C	0C	0E	0E	H-Size	(CXD2018Q)
28	PAP	00~3F	2E	2E	2E	2E	Pin-Amp	(CXD2018Q)
29	TLT	00~0F	09	09	09	09	Tilt	(CXD2018Q)
2A	UCP	00~0F	0A	0A	0A	0A	Upper Corner Pin	(CXD2018Q)
2B	LCP	00~0F	0C	0C	0C	0C	Lower Corner Pin	(CXD2018Q)
2C	VBW	00~0F	08	08	08	08	V-Bow	(CXD2018Q)
2D	VAG	00~0F	08	08	08	08	V-Angle	(CXD2018Q)
2E	HVV	00~07	04	04	07	07	HV-Comp-V	(CXD2018Q)
2F	HVH	00~07	00	00	00	00	HV-Comp-H	(CXD2018Q)
30	FCL	00~07	03				Frame Color	(SDA 9188)
31	FON	00~01	01				Frame ON	(SDA 9188)
			50 Hz		60 Hz			
32	DLY	00~07	00		00		Select Delay LL 3P	(SDA 9188)
33	P-V	00~0F	07		07		V read delay	(SDA 9188)
34	PVS	00~07	04		04		PIP-V offset	(SDA 9188)
35	P-H	00~3F	0D		0A		H read delay	(SDA 9188)
36	PHS	00~0F	04		03		PIP-H offset	(SDA 9188)

Item number	Adjustment Item	Data range	Standard DATA				Note	Device
			50 Hz		60 Hz			
			Normal	Wide	Normal	Wide		
37	CTR	00~0F	0A				Contrast	(SDA 9188)
38	EPL	00~01	01				External PLL	(SDA 9188)
39	FWV	00~01	01				Frame Width V	(SDA 9188)
3A	FWH	00~01	01				Frame Width H	(SDA 9188)
3B	DVI	00~0F	07				Setting Delay VSI	(SDA 9188)
3C	DVP	00~0F	0F				Delay VSP Pulse	(SDA 9188)
3D	BRT	00~0F	0C				Frame BRIGHT Data	(SDA 9188)
3E	LEV	00~0F	00				Level Adjust	(TDA9840)
3F	STR	00~3F	02				Stereo Adjust	(TDA9840)
40	AXG	00~01	00				AUX Output Gain	(TDA8204)
41	AXM	00~01	00				AUX Output Mute	(TDA8204)
42	VCX	00~01	00				VCXO free run	(TDA8204)
43	ERC	00~01	00				Error count Time	(TDA8204)
44	MXE	00~01	00				MAX. allowed Error	(TDA8204)
45	SRO	00~01	00				SRO set Bit	(TDA8204)
46	ATO	00~00	01				Auto Selection	(TDA8204)
47	SYS	00~01	00				System select	(TDA8204)
48	FSW	00~03	00				Force Switch	(TDA8204)
49	SYN	00~01	01				Synthesizer	(TDA8204)
4A	VCR	00~01	00				VCC Reference Sw	(CXP1315P)
4B	SEL	00~FF	5F				Separation Level	(CXP1315P)
4C	TXP	00~0F	07				Teletext Picture	(Teletext μ-Con)
4D	ODL	00~FF	10				Power ON Delay	(CXP80424)
4E	OSH	00~3F	0F				OSD Position H	(CXP80424)
4F	BLU	00~01	01				Blue Back Feature	(CXP80424)
50	ROC	00~0F	04				Center of Rotation	(CXP80424)
51	ROS	00~07	07				Step Width	(CXP80424)
52	HTR	00~3F	1F	1F	1F	1F	H Trapezoid	(CXP80424)
53	MUT	00~01	01				No Sync. Mute	(CXP80424)
54	DID	00~01	00				Disable Degauss	(CXP80424)
55	OP0	00~FF	*1				Option 0	(CXP80424)
56	OP1	00~0F	*2				Option 1	(CXP80424)

*1 : Input data are different according to models.

Item	CCD	Text	PinP	Jpn	Nicm	W.G	Mts	Comb
KV-F25MF1J	0	0	0	0	0	0	0	1
KV-F29MF1J	0	0	0	0	0	0	0	1
KV-F29SF11	0	1	0	0	0	0	0	1

*2 : Input data are different according to models.

Item	—	—	—	Turn	Mono	Tilt	—	Chin
KV-F25MF1J	0	0	0	0	0	0	0	1
KV-F29MF1J	0	0	0	0	0	1	0	1
KV-F29SF11	0	0	0	0	0	1	0	1

NOTE : The above data should be included on page (below the table *1 and *2) in order to explain how to convert data from table into service mode value.

5-3. PICTURE QUALITY ADJUSTMENTS

Item Numbers 03-05, 18

03 SCL
04 SHU
05 SBR
18 SSH

} Set to the standard values.

5-4. A BOARD ADJUSTMENT

SUB CONTRAST ADJUSTMENT (SCN)

1. Receive a PAL color-bar.
2. Put DC 4.0V to the pin ㉖ (ABL IN) of IC 304, A board. Set the PICTURE 100%, BRIGHT 50% and COLOR MIN.
3. Connect an oscilloscope to the pin ⑥ (R OUT) of CN118, A board.
4. Set to Service Mode and select 01 (SCN) with [1] and [4] of the commander to adjust to 2.2±0.05 V.
5. Press [MUTING] → [0] of the commander to write the data.
6. Receive a NTSC color-bar and adjust 01 (SCN) same value as PAL.
7. Receive the PAL color-bar to set to WIDE mode by pressing [MENU]. Then set to Service Mode and adjust 01 (SCN) to write the 2 step dropped value of the step 4.
8. Receive the NTSC color-bar and adjust as step 7.

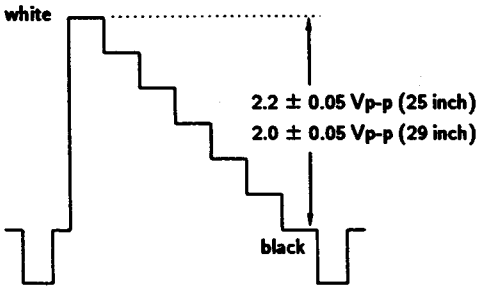

SUB COLOR ADJUSTMENT (SCL)

1. Receive a PAL color-bar.
   Set to the following condition :
   PIC 100%, BRT 50%, COL 38%
2. Connect an oscilloscope to the pin ⑦ (B OUT) of CN118, A board.
3. Set to Service Mode and select 03 (SCL) with [1] and [4] of the commander to adjust to VB2=VB3=VB4 with [3] and [6].
4. Press [MUTING] → [0] of the commander to write the data.
5. Adjust as step 4 and 5 by receiving NTSC color-bar.

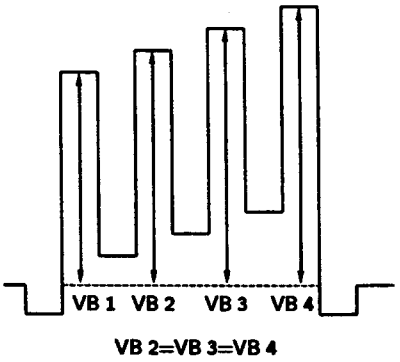

6. Receive the PAL color-bar to set to WIDE mode by pressing [MENU]. Then set to Service Mode and adjust 03 (SCL) to write the 1 step dropped value of the step 4.
7. Receive the NTSC color-bar and adjust as step 6.

SUB HUE ADJUSTMENT (SHU)

1. Receive a NTSC color-bar.
2. Connect an oscilloscope to the pin ⑦ (B OUT) of CN118, A board.
3. Select 04 (SHU) with 1 and 4 of the commander by setting to Service Mode and adjust to VB1=VB2= VB3=VB4 with 3 and 6.

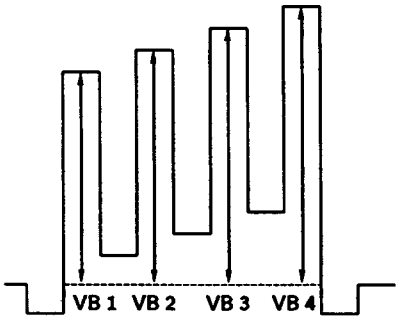

VB 1=VB 2=VB 3=VB 4

4. Press MUTING → 0 of the commander to write the data.
5. Set to WIDE Mode by MENU button to write the same value as the step 3.

Y. FILTER ADJUSTMENT (YF1)

1. Set to Service Mode.
2. Select 14 (Y. SW) with the 1 and 4 of the commander to set the data "3" with 3 and 6.
3. Put SINE wave of 4.43 MHz to the pin ② (YIN) of IC304.
4. Connect an oscilloscope to the pin ① of CN105, A board.
5. Adjust so that the waveform is minimum by selecting 11 (YF1) with 3 and 6.
   Change back 14 (Y. SW) to data "1".
6. Press MUTING → 0 of the commander to write the data.

5-5. PICTURE DISTORTION ADJUSTMENT

Item Numbers 23-2D

23 VSZ (V SIZE)

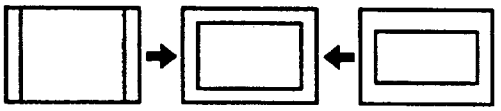

24 VSF (V SHIFT)

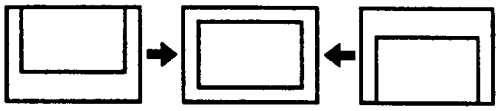

25 SCR (VERTICAL S correction)

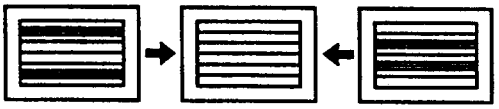

26 VLN (V LINEARITY)

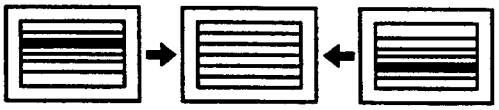

27 HSZ (H SIZE)

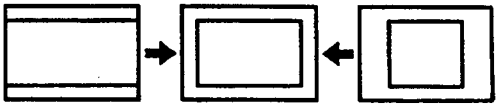

28 PAP (PIN AMP)

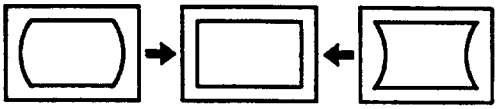

29 TLT (TILT)

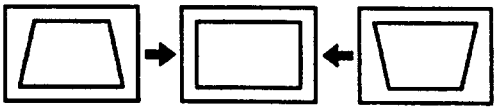

2A UCP (Upper Corner Pin)

2B LCP (Lower Corner Pin)

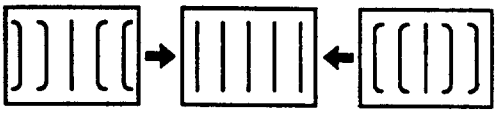

2C VBOW (V-BOW)

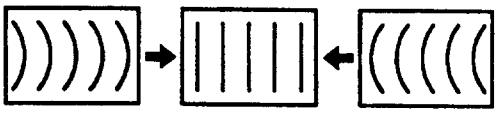

2D VAG (V-ANGLE)

SECTION 6
DIAGRAMS

6-1. BLOCK DIAGRAM

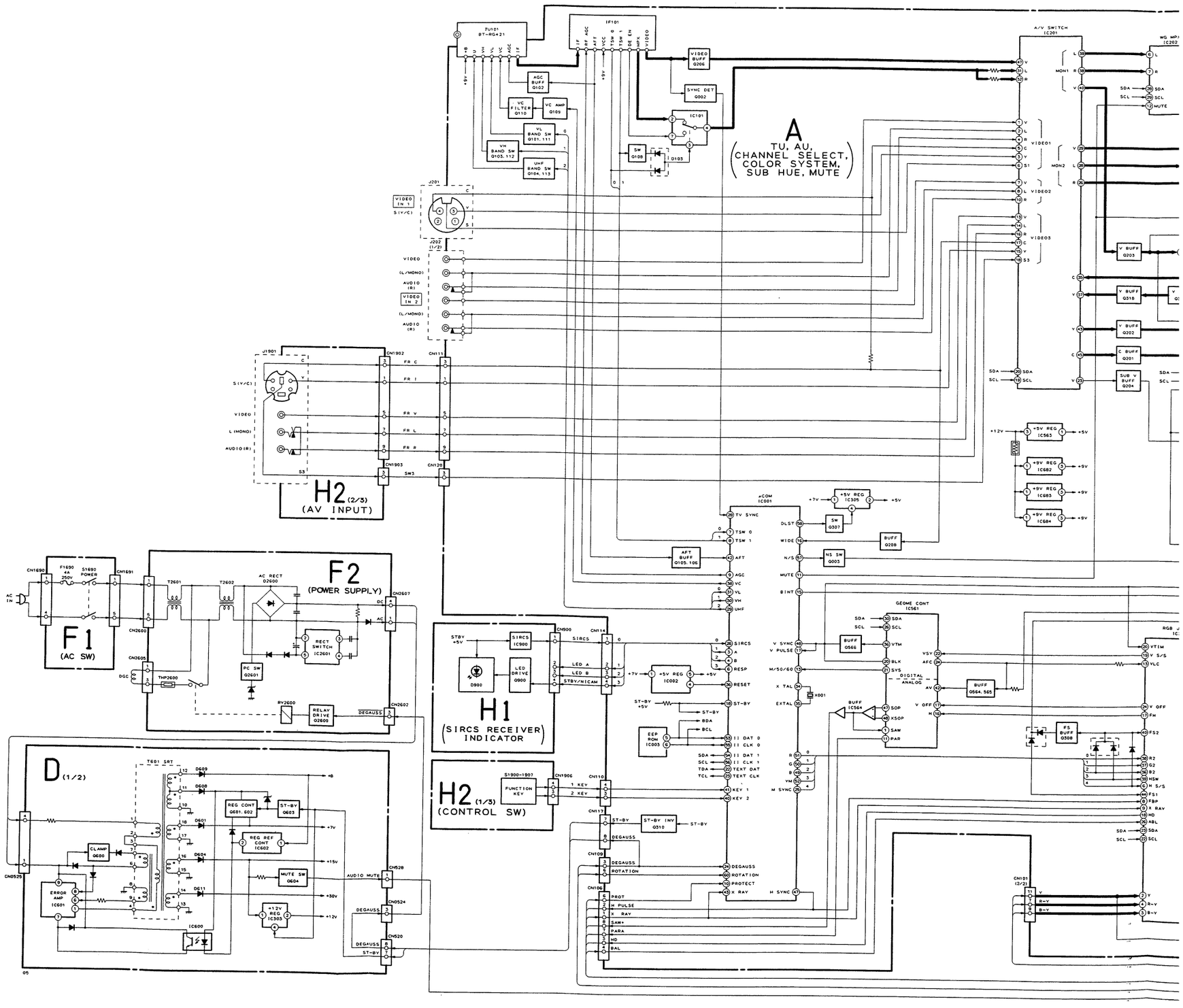

A/V SWITCH IC201
WS MPX IC202
HP/SP AMP IC203
MUTE Q210
MUTE Q209
MUTE Q205
CN107
HP L
HP R
SP L
SP R
CN1901
CN1900
J900 HEADPHONE
L
R
H2 (3/3)
J202 (2/2)
MONITOR OUT
(L/MONO)
AUDIO (R)
VIDEO1
VIDEO2
VIDEO3
MON1
MON2
V BUFF Q207
D218
OFF MUTE
CN108
V BUFF Q203
Y/C PROC IC301
V BUFF Q313, 314
V BUFF Q318
V AMP Q317
V BUFF Q316
V BUFF Q202
C BUFF Q201
SUB V BUFF Q204
1H DLY IC302
X301 4.43MHz
X302 3.58MHz
CN101 (1/2)
+5V REG IC563
+5V REG IC682
+5V REG IC685
+5V REG IC684
+12V
+5V
+9V
SDA
SCL
SSCP
SUB VIDEO
V PULSE
CN115
N/S
CN1401 (1/2)
V/U/V SW IC1406
PIN CONCEPT IC1404
PIN CONCEPT IC1403
CHROMA DEC IC1401
PIP-PLL IC1405
SW Q1416, 1417
SW Q1413, 1414
SW Q1415
BASE BAND DELAY IC1402
Y AMP Q1401
Y BUFF Q1404, 1405
R-Y BUFF Q1402
B-Y BUFF Q1403
BUFF Q1420
BUFF Q1422
BUFF Q1421
BUFF Q1408
BUFF Q1407
BUFF Q1409
BUFF Q1406
CN1401 (2/2)
X1401 3.58M
X1402 4.43M
+12V REG IC1407
+8V REG IC1410
+5V REG IC1411
P (PINP)
RGB JUNGLE IC304
BUFF Q564, 565
FS BUFF Q308
VM AMP Q309
IK BUFF Q306
IK BLK Q311, 312
OFF MUTE Q303, 304
V BUFF Q107
CN118
CN104
CN105
CN1761
CN1762
VM MUTE Q1756
VM AMP Q1761, 1762, 1764
VM AMP Q1766
BUFF Q1767
VM DRIVE Q1763, 1765
NECK ASS'Y
VM (VM OUT)
CN2101
CN2102
SCP IN/OUT Q2101, 2102
A2 (R.G.B IN/OUT) (SCP IN/OUT)
C (RGB OUT)
R DRIVE Q712
R AMP Q706
R OUT Q703
G DRIVE Q711
G AMP Q705
G OUT Q702
B DRIVE Q710
B AMP Q704
B OUT Q701
IK LIMIT Q709
IK LIMIT Q708
IK LIMIT Q707
IK DET Q713
BIAS Q714
RV701 Q2
RV702 H STAT
CN705
CN701
PICTURE TUBE
1000V
200V
H1
H2
FV
D1 (ROTATION CIRCUIT, V PIN CORRECTION, PICTURE ROTATION CONT., V PIN CONT.
CN1801
ROTATION
N/S MUTE
N/S DRIVE IC1804
BUFF Q1814, 1815
N/S DRIVE Q1816, 1817
DEGAUSS SW Q1812, 1813
INV Q1818
IC1804
N/S COIL
CN1804
CN1802 (2/2)
RV1801 PULSE WIDTH
IC1852
V PIN DRIVE IC1853
V PIN DRIVE/OUT Q1859-1861
V PIN DRIVE/OUT Q1854-1858
L1852
V POT
INV Q1851
RV1853 V PIN AMP
VCC DRV IC1852
VCC OUT Q1857, 1858
CN0523 (1/2)
CN0523 (2/2)
CN1802 (1/2)
CN0526
H TRPZ
CN0518
CN0522
CN1822
QP DRIVE Q1840, 1841
+5V REG IC1851
CN0521
T801 FBT
D801
D815
D814
D816
+135V
+15V
-15V
T804
DY ASS'Y
H DY
V DY
CN0506
H DRIVE
H PULSE
PARA
ABL
SAW+
PROT
X RAY
H DRIVE Q2502
T2502 HOT
H OUT Q2591
DAMPER
T2503 PMT
L2509 HLC
PIN DRIVE Q2505
PIN OUT Q2503
PIN CONTROL IC2504
S2501
S2502
V OUT IC1501
PROTECT Q1501-1504
O.C.P OUT Q803
IC804
D (2/2) (H/V OUT)

6-2. FRAME SCHEMATIC DIAGRAM

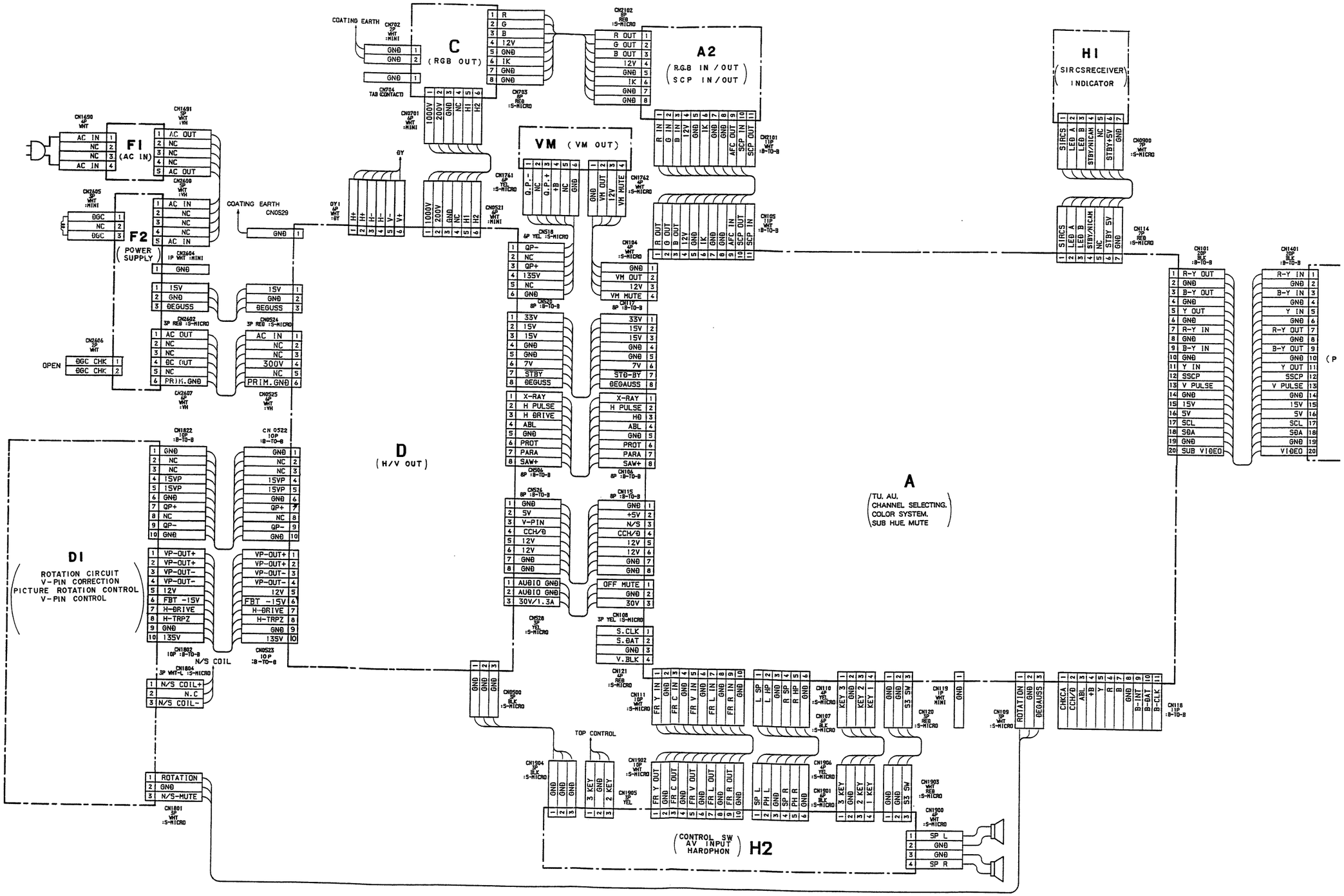

. CIRCUIT BOARDS LOCATION

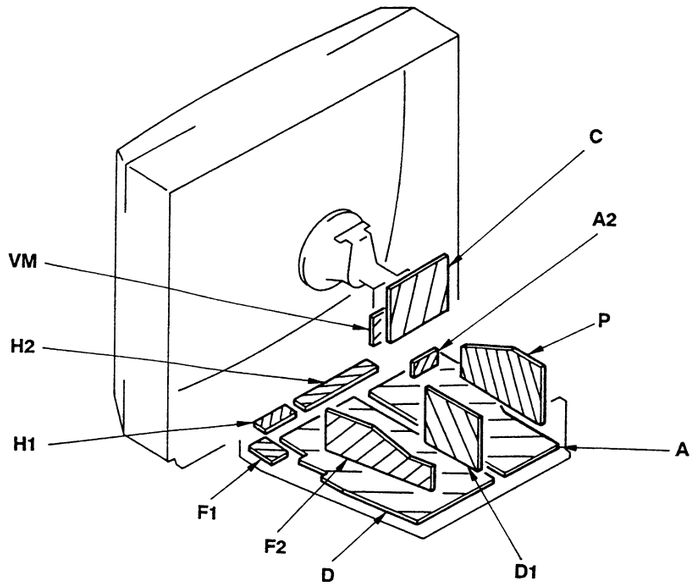

6-4. SCHEMATIC DIAGRAMS AND PRINTED WIRING BOARDS

Note:

- All capacitors are in μF unless otherwise noted. pF: μμF 50 WV or less are not indicated except for electrolytic and tantalums.
- All resistors are in ohms.
  kΩ =1000Ω, MΩ =1000KΩ
- Indication of resistance, which does not have one for rating electrical power, is as follows.

Pitch: 5 mm
Rating electrical power ¼ W (CHIP: 1/10W)

- : nonflammable resistor.
- △ : internal component.
- : panel designation, or adjustment for repair.
- All variable and adjustable resistors have characteristic curve B, unless otherwise noted.
- Readings are taken with a color-bar signal input.
  no mark : PAL
  〈 〉: SECAM
  ( ): NTSC 3.58
  { }: NTSC 4.43
- Readings are taken with a 10 MΩ digital multimeter.
- Voltage are dc with respect to ground unless otherwise noted.
- Voltage variations may be noted due to normal production tolerances.
- All voltages are in V.
- ＊ : Can not be measured.
- Circled numbers are waveform reference.
- ▬▬ : B + bus.
- ▬ ▬ ▬ : B − bus.
- ▒▒▒ : signal path.

Note: The components identified by shading and mark ⚠ are critical for safety. Replace only with part number specified.

Reference information

RESISTOR	: RN	METAL FILM
	: RC	SOLID
	: FPRD	NONFLAMMABLE CARBON
	: FUSE	NONFLAMMABLE FUSIBLE
	: RS	NONFLAMMABLE METAL OXIDE
	: RB	NONFLAMMABLE CEMENT
	: RW	NONFLAMMABLE WIREWOUND
	: ※	ADJUSTMENT RESISTOR
COIL	: LF-8L	MICRO INDUCTOR
CAPACITOR	: TA	TANTALUM
	: PS	STYROL
	: PP	POLYPROPYLENE
	: PT	MYLAR
	: MPS	METALIZED POLYESTER
	: MPP	METALIZED POLYPROPYLENE
	: ALB	BIPOLAR
	: ALT	HIGH TEMPERATURE
	: ALR	HIGH RIPPLE

PRINTED WIRING BOARDS

F1 [AC IN] **H1** [SIRCS RECEIVER, INDICATOR] **F2** [POWER SUPPLY] **H2** [CONTROL SW, AV INPUT, HEADPHONE]

– F1 Board –

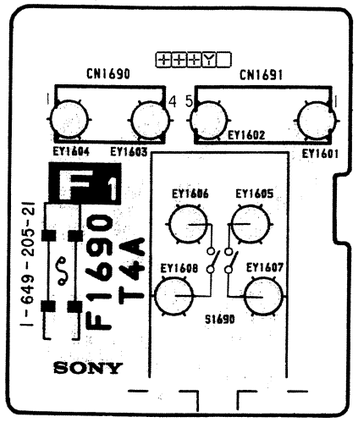

– H1 Board –

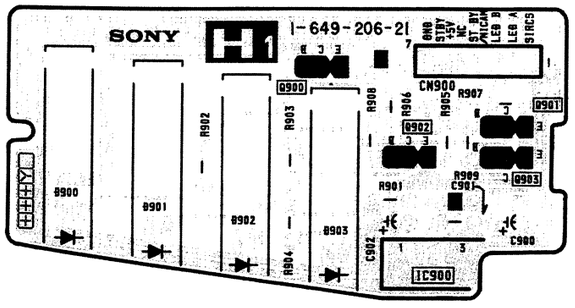

– F2 Board –

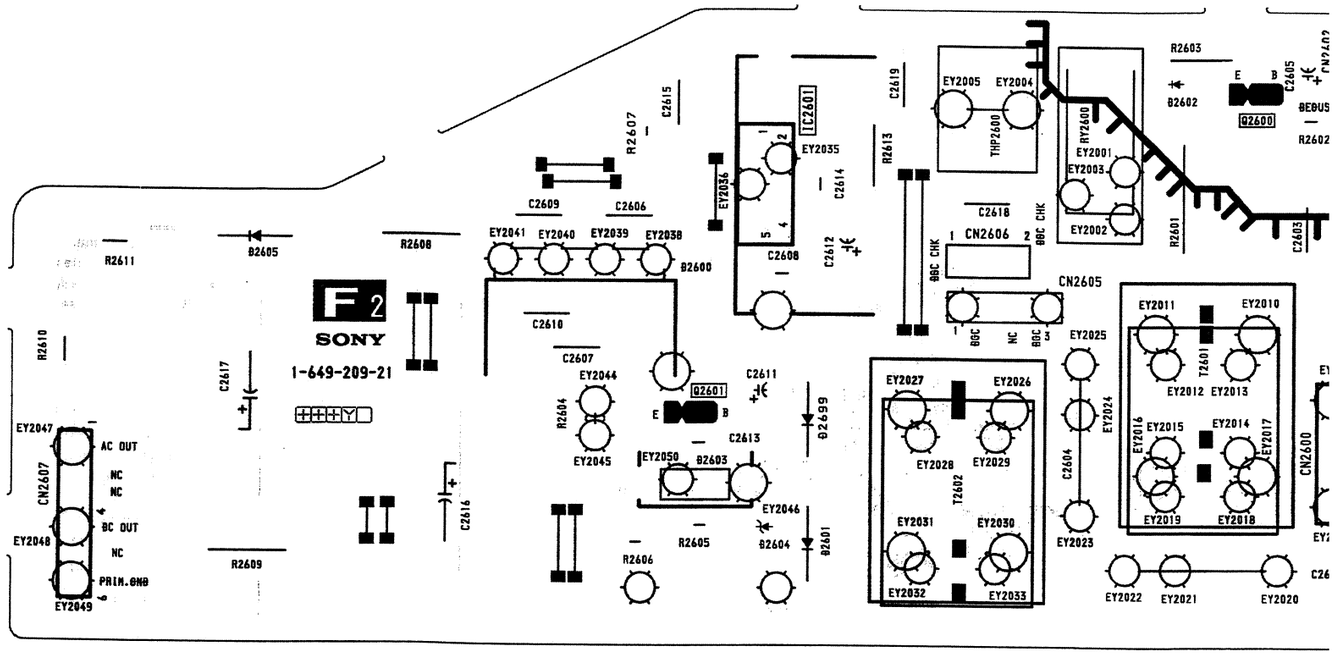

– H2 Board –

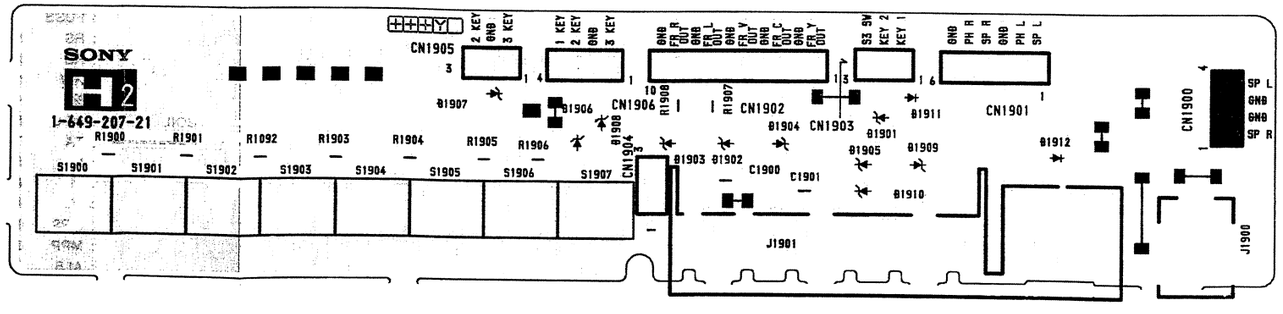

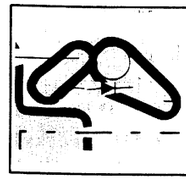

NOTE:
The cir
600 Vp
inspecti

D [H/V OUT]

– D Board –

• **D BOARD**

IC		DIODE	
IC303	F – 3	D601	B – 4
IC600	B – 1	D602	D – 4
IC601	B – 3	D604	C – 2
IC602	F – 1	D606	D – 4
IC804	F – 7	D607	C – 2
IC1501	E – 10	D608	E – 2
IC2504	E – 3	D609	D – 2
		D610	B – 3
		D611	D – 2
		D612	E – 1
		D613	A – 3
		D614	E – 1
		D615	F – 2
		D616	D – 4
		D617	A – 3
		D624	F – 2
TRANSISTOR		D801	C – 7
		D802	B – 9
		D803	F – 6
Q600	C – 4	D814	E – 9
Q601	E – 1	D815	B – 8
Q602	E – 1	D816	A – 9
Q603	E – 1	D824	E – 5
Q604	F – 3	D825	E – 5
Q803	F – 6	D1501	E – 9
Q1501	F – 9	D1502	F – 5
Q1502	E – 9	D1503	E – 10
Q1503	E – 9	D1504	F – 9
Q1504	F – 9	D1505	F – 5
Q2501	F – 4	D1506	E – 9
Q2502	D – 5	D2506	D – 7
Q2503	E – 4	D2507	E – 7
Q2505	E – 4	D2508	D – 6
Q2591	D – 6	D2509	E – 3
		D2510	B – 5
		D2511	C – 5
		D2512	F – 4
		D2515	F – 4
		D2524	F – 3
		D2526	F – 1
		D2527	F – 1

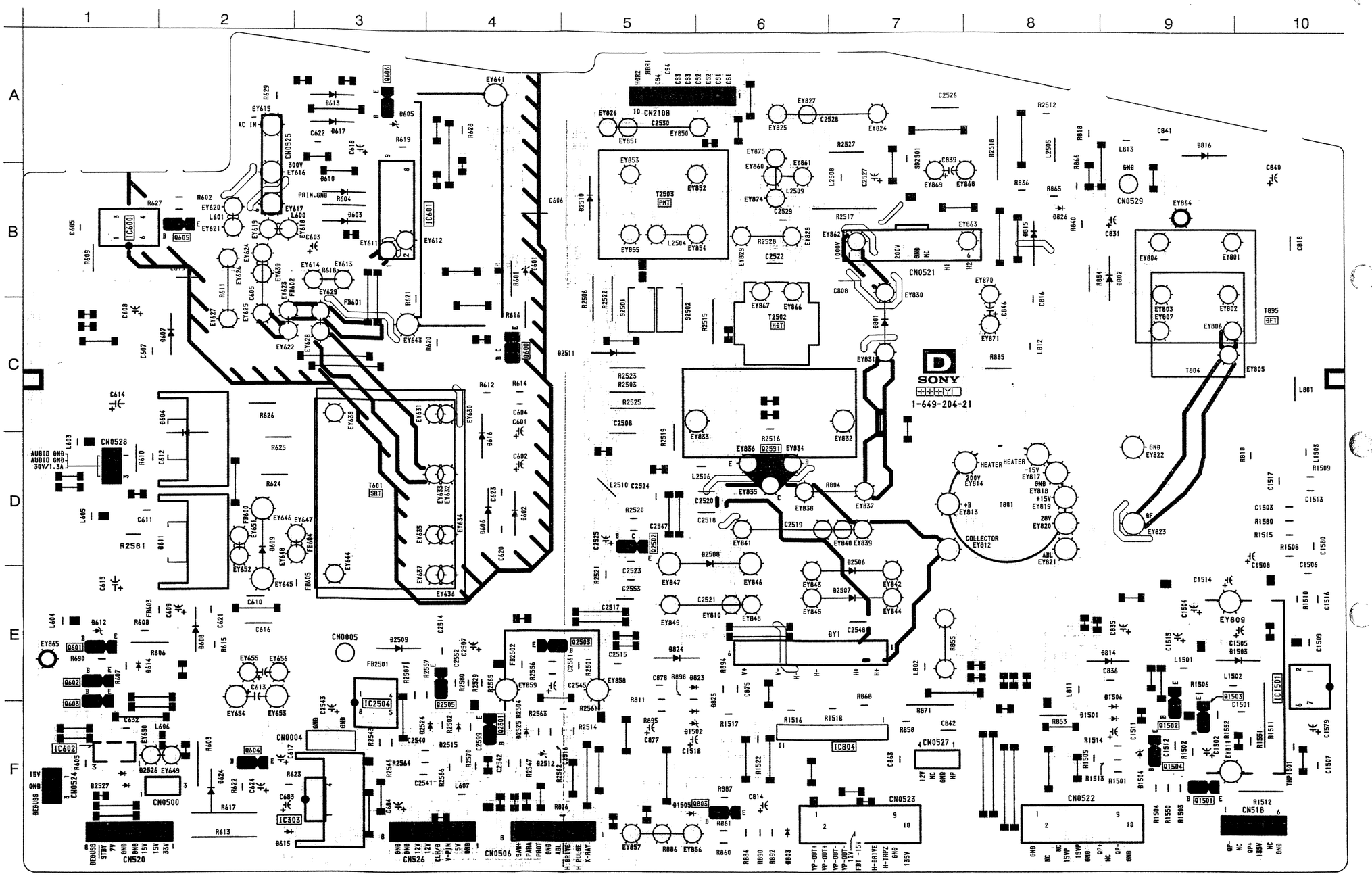

:ed as left contains high voltage of over
ıst be paid to prevent an electric shock in
ring.

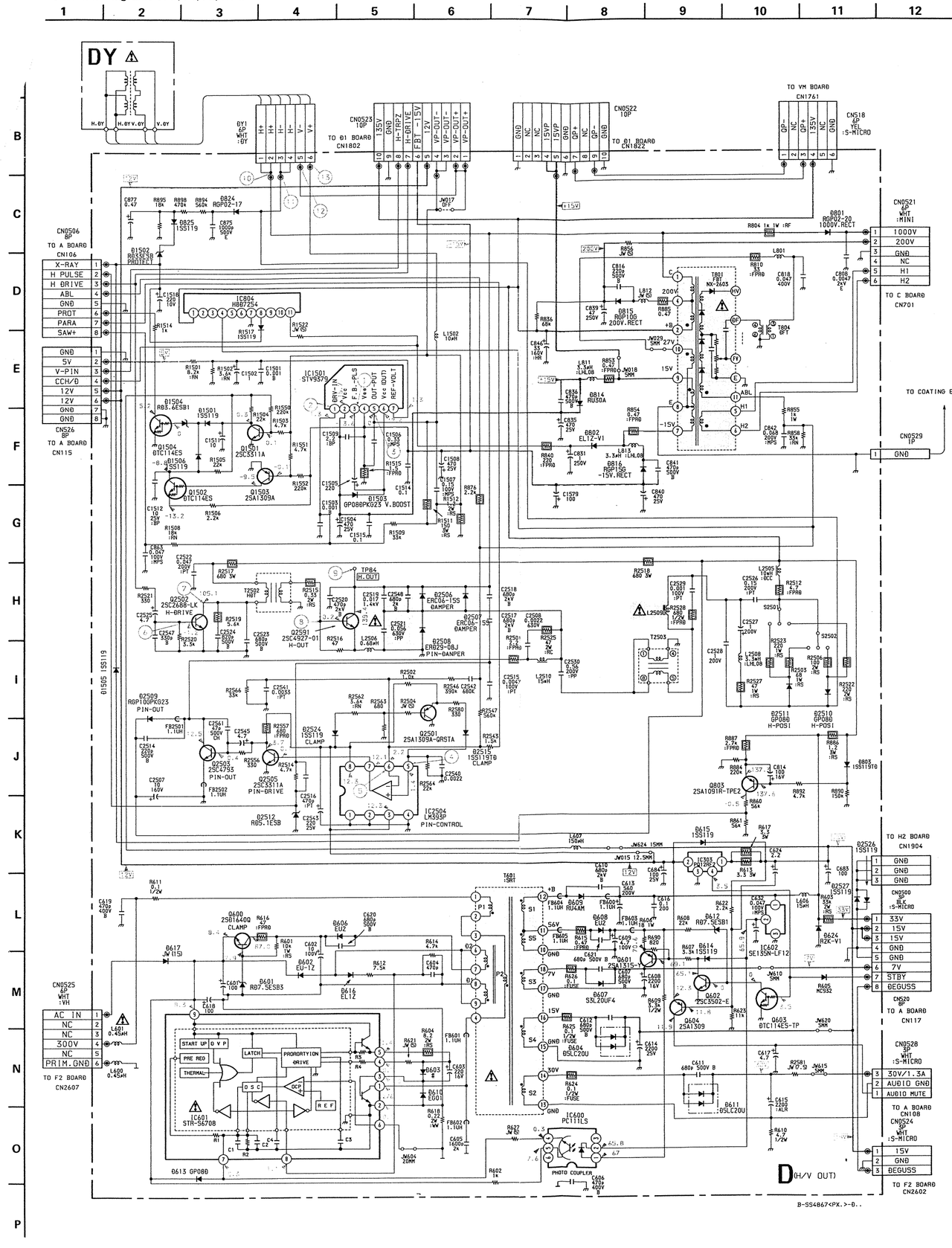

• D BOARD WAVEFORMS

1 2.0 Vp-p (V)	2 0.5 Vp-p (V)	3 60 Vp-p (V)	4 1.6 Vp-p (H)
5 0.3 Vp-p (V)	6 3.0 Vp-p (H)	7 170 Vp-p (H)	8 18 Vp-p (H)
9 970 Vp-p (H)	10 970 Vp-p (H)	11 160 Vp-p (H)	12 100 Vp-p (V)
13 65 Vp-p (V)			

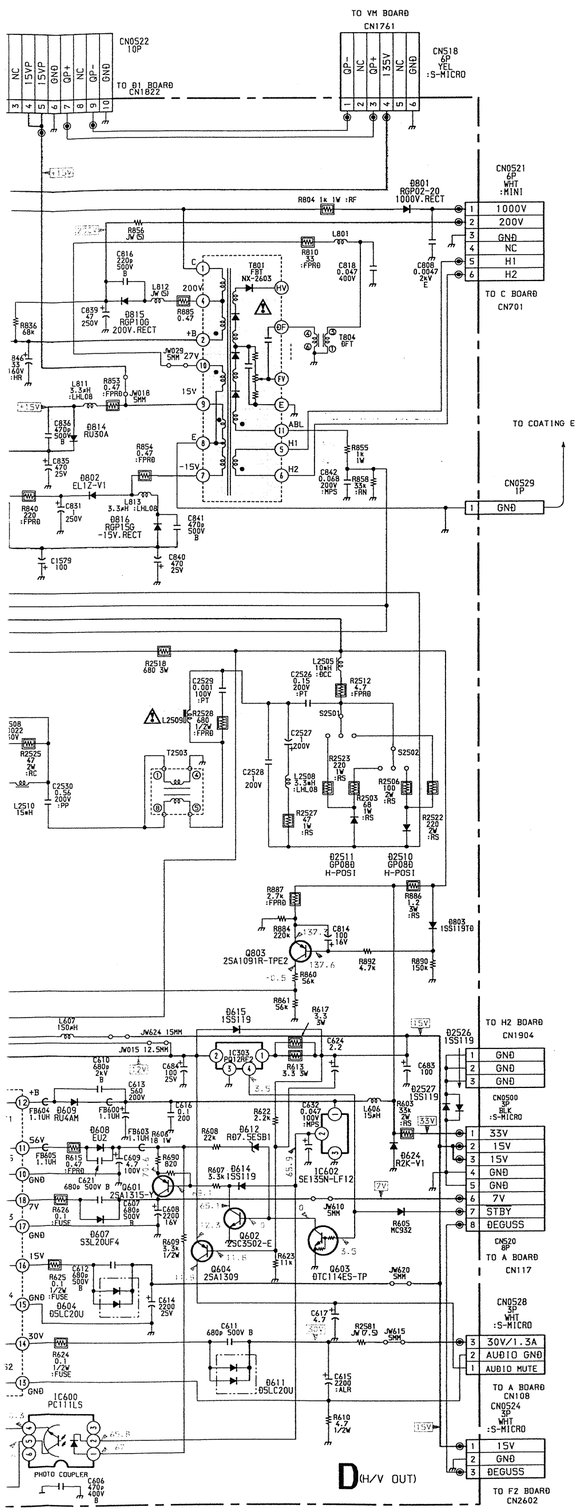
TO VM BOARD
CN1761
CN518 6P YEL :S-MICRO
CN0522 10P
TO R1 BOARD CN1822
CN0521 6P WHT :MINI
1 1000V
2 200V
3 GND
4 NC
5 H1
6 H2
TO C BOARD CN701
TO COATING E
CN0529 1P
1 GND
D (H/V OUT)
TO H2 BOARD CN1904
CN0500 3P :S-MICRO
1 33V
2 15V
3 15V
4 GND
5 GND
6 7V
7 STBY
8 DEGUSS
CN620 8P
TO A BOARD CN117
CN0528 3P WHT :S-MICRO
3 30V/1.3A
2 AUDIO GND
1 AUDIO MUTE
TO A BOARD CN108
CN0524 3P WHT :S-MICRO
1 15V
2 GND
3 DEGUSS
TO FZ BOARD CN2602
B-SS4867<PX.>-0..
—44—

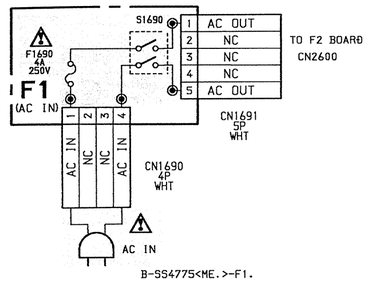
S1690
F1690 4A 250V
F1 (AC IN)
1 AC OUT
2 NC
3 NC
4 NC
5 AC OUT
TO F2 BOARD CN2600
CN1691 5P WHT
CN1690 4P WHT
AC IN
B-SS4775<ME.>-F1.

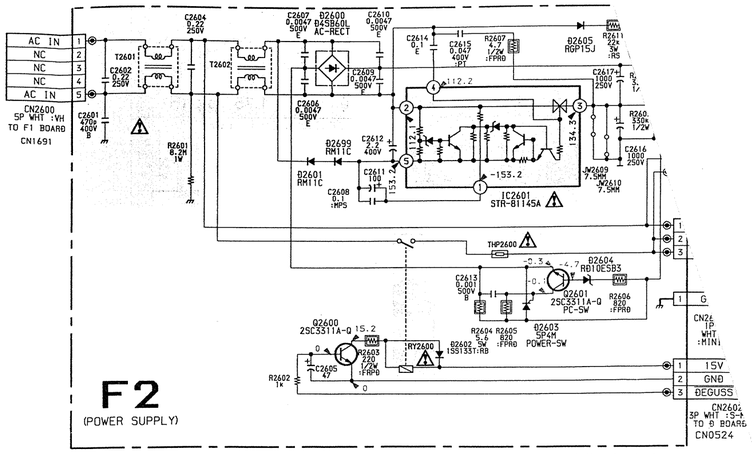
AC IN
NC
NC
NC
AC IN
CN2600 5P WHT :VH TO F1 BOARD CN1691
IC2601 STR-B1145A
Q2600 2SC5311A-Q
Q2601 2SC5511A-Q PC-SW
Q2603 5P4M POWER-SW
THP2600
CN25 1P WHT :MINI
1 G
CN26 3P WHT :MINI
1 15V
2 GND
3 DEGUSS
CN2602 2P WHT :S-A TO B BOARD CN0524
F2 (POWER SUPPLY)
B-SS4870<ME.>-F2./1

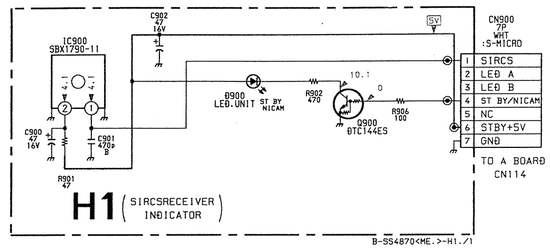
IC900 SBX1790-11
CN900 7P WHT :S-MICRO
1 SIRCS
2 LED A
3 LED B
4 ST BY/NICAM
5 NC
6 STBY+5V
7 GND
TO A BOARD CN114
H1 (SIRCSRECEIVER INDICATOR)
B-SS4870<ME.>-H1./1

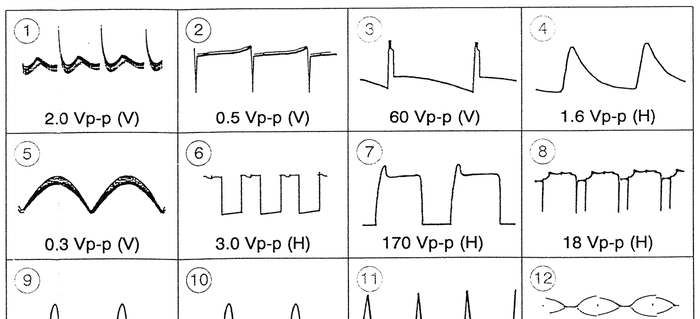
• D BOARD WAVEFORMS
1 2.0 Vp-p (V)
2 0.5 Vp-p (V)
3 60 Vp-p (V)
4 1.6 Vp-p (H)
5 0.3 Vp-p (V)
6 3.0 Vp-p (H)
7 170 Vp-p (H)
8 18 Vp-p (H)
9 970 Vp-p (H)
10 970 Vp-p (H)
11 160 Vp-p (H)
12 100 Vp-p (V)
13 65 Vp-p (V)

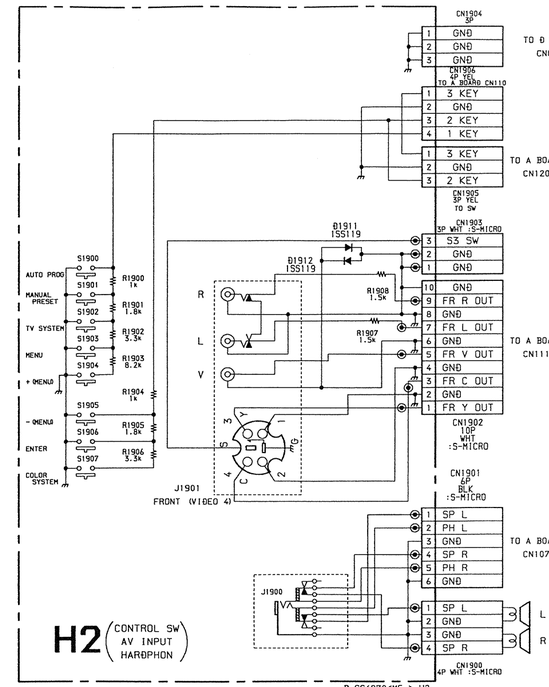
CN1904 3P
1 GND
2 GND
3 GND
TO D BOARD CN0500
CN1906 4P YEL TO A BOARD CN110
1 3 KEY
2 GND
3 3 KEY
4 1 KEY
CN1905 3P YEL TO SW
1 3 KEY
2 GND
3 2 KEY
TO A BOARD CN120
CN1903 3P WHT :S-MICRO
1 S3 SW
2 GND
3 GND
S1900 AUTO PROG
S1901 MANUAL PRESET
S1902 TV SYSTEM
S1903 MENU
S1904 + MENU
S1905 - MENU
S1906 ENTER
S1907 COLOR SYSTEM
CN1902 10P WHT :S-MICRO
10 GND
9 FR R OUT
8 GND
7 FR L OUT
6 GND
5 FR V OUT
4 GND
3 FR C OUT
2 GND
1 FR Y OUT
TO A BOARD CN111
J1901 FRONT (VIDEO 4)
CN1901 6P BLK :S-MICRO
1 SP L
2 PH L
3 GND
4 SP R
5 PH R
6 GND
TO A BOARD CN107
J1900 VA
1 SP L
2 GND
3 GND
4 SP R
CN1900 4P WHT :S-MICRO
H2 (CONTROL SW AV INPUT HARØPHON)
B-SS4870<ME.>-H2.

iagram of A Board

AVEFORMS

5 Vp-p (H)	② 2.0 Vp-p (H)	③ PAL SECAM NTSC4.43 2.0 Vp-p (H)	③ NTSC3.58 1.75 Vp-p (H)
2.25 Vp-p (H)	⑤ 2.25 Vp-p (H)	⑥ 2.0 Vp-p	⑦ PAL SECAM NTSC4.43 2.0 Vp-p (H)
⑦ NTSC3.58 1.75 Vp-p (H)	⑧ 1.2 Vp-p (H)	⑨ PAL SECAM NTSC4.43 1.1 Vp-p (H)	⑨ NTSC3.58 0.8 Vp-p (H)
⑩ 1.2 Vp-p (H)	⑪ 0.8 Vp-p (H)	⑫ 0.9 Vp-p (H)	⑬ 0.8 Vp-p (H)
⑭ 0.9 Vp-p (H)	⑮ 1.6 Vp-p (H)	⑯ 1.3 Vp-p	⑰ 3.2 Vp-p (H)
⑱ 3.2 Vp-p (H)	⑲ 3.2 Vp-p (H)		

A Board IC201 CXA1545AS

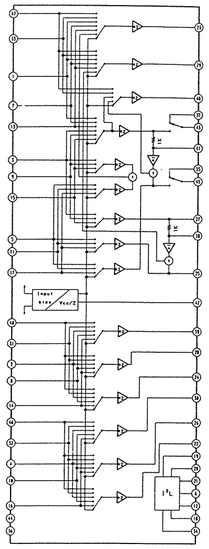

A Board IC301 TDA9145

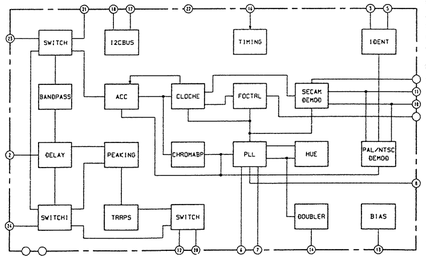

Schematic diagrams

D F1 F2

← H1 H2 boards

Schematic diagram

A board →

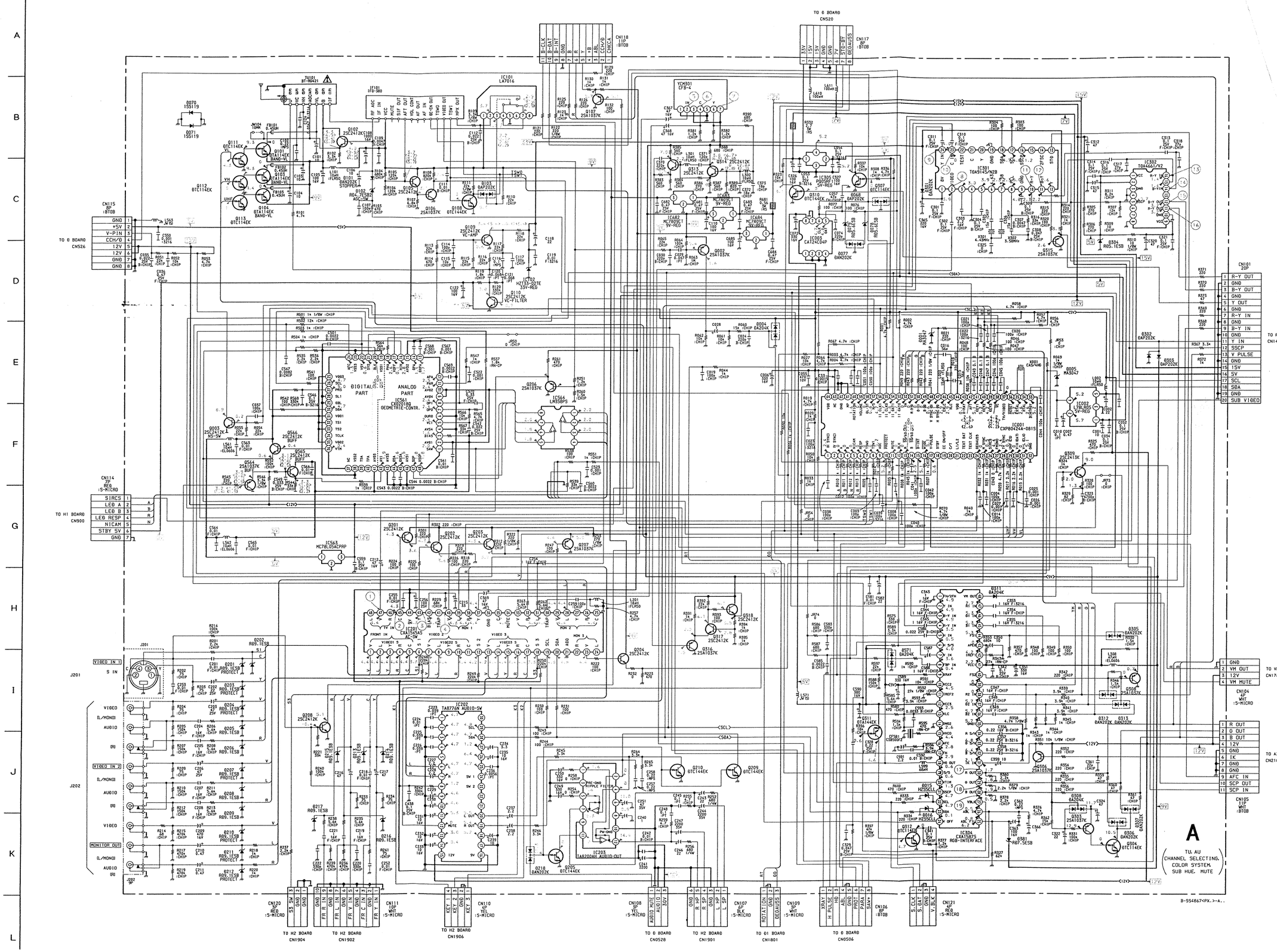
TO G BOARD
CN520
TO G BOARD
CN526
TO H1 BOARD
CN900
TO P BOARD
CN1401
TO VM BOARD
CN1762
TO A2 BOARD
CN2101
TO H2 BOARD
CN1904
TO H2 BOARD
CN1902
TO H2 BOARD
CN1906
TO G BOARD
CN0528
TO H2 BOARD
CN1901
TO D1 BOARD
CN1801
TO G BOARD
CN0506
DIGITAL PART
ANALOG PART
IC561
CXD2018Q
GEOMETRIC-CONTR.
IC201
CXA1545AS
AC-SW
IC202
TA8776N AUDIO-SW
IC203
TA8220AN AUDIO-OUT
IC304
CXA1587S
RGB-INTERFACE
IC001
CXP80424A-081S
IC301
TDA9145/N2B
IC302
TDA4661/V2
IC101
LA7016
IC102
HZ133-02TE
33V-REG
IC564
LM358PS
IC563
MC78L05ACPRP
IC501
CFB-4
IC502
CA124C04P
IC503
CA124C04P
IC504
CXA1587S
RGB-INTERFACE
A
TU AU
CHANNEL SELECTING.
COLOR SYSTEM.
SUB HUE. MUTE
B-554867<PX.>-A..

A [TU, AU, CHANNEL SELECTION, COLOR SYSTEM, SUB HUE, MUTE]

A Board IC304 CXA1587S

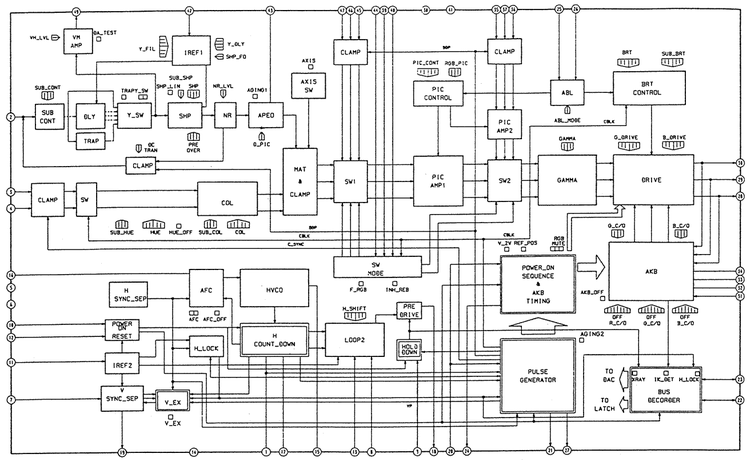

• A BOARD

IC

IC001	B – 2
IC002	C – 3
IC003	C – 1
IC101	D – 6
IC102	C – 8
IC201	C – 9
IC202	B – 6
IC203	D – 5
IC301	E – 3
IC302	E – 4
IC304	D – 2
IC305	A – 2
IC561	C – 5
IC563	B – 5
IC564	B – 4
IC682	A – 7
IC683	B – 6
IC684	B – 6

TRANSISTOR

Q002	E – 1
Q003	B – 3
Q101	D – 9
Q102	E – 8
Q103	E – 9
Q104	E – 9
Q105	E – 6
Q106	E – 6
Q107	A – 9
Q108	D – 6
Q109	D – 9
Q110	D – 9
Q111	D – 9
Q112	E – 9
Q113	E – 9
Q201	B – 9
Q202	B – 8
Q203	B – 8
Q204	C – 7
Q205	D – 5
Q206	B – 9
Q207	B – 8
Q208	C – 7
Q209	D – 6
Q210	D – 5
Q303	C – 2
Q304	C – 2
Q306	E – 1
Q307	A – 1
Q308	D – 2
Q309	C – 2
Q310	A – 2
Q311	D – 1
Q312	D – 1
Q313	B – 9
Q314	A – 9
Q315	E – 3
Q316	A – 9
Q317	A – 9
Q318	A – 8
Q564	B – 5
Q565	B – 5
Q566	C – 5

DIODE

D001	B – 2
D004	C – 1
D005	C – 2
D015	E – 1
D016	E – 1
D068	C – 1
D077	C – 1
D078	C – 1
D079	C – 1
D101	E – 7
D102	E – 6
D103	D – 6
D201	B – 9
D202	B – 9
D203	B – 9
D204	C – 9
D205	B – 9
D206	B – 9
D207	C – 9
D208	C – 9
D209	C – 9
D210	D – 9
D211	D – 9
D212	D – 9
D213	C – 8
D214	C – 8
D215	C – 8
D216	C – 8
D217	C – 8
D218	D – 5
D301	D – 3
D302	E – 5
D303	E – 2
D304	E – 4
D305	C – 2
D306	D – 2
D307	C – 2
D308	C – 2
D311	C – 3
D312	C – 2
D313	C – 2
D381	D – 1
D571	E – 2

IF BLOCK

IF101	D – 6

TUNER

TU101	E – 9

CRYSTAL

X001	C – 3
X301	E – 3
X302	E – 2

PRINTED WIRING BOARDS
– A Board –

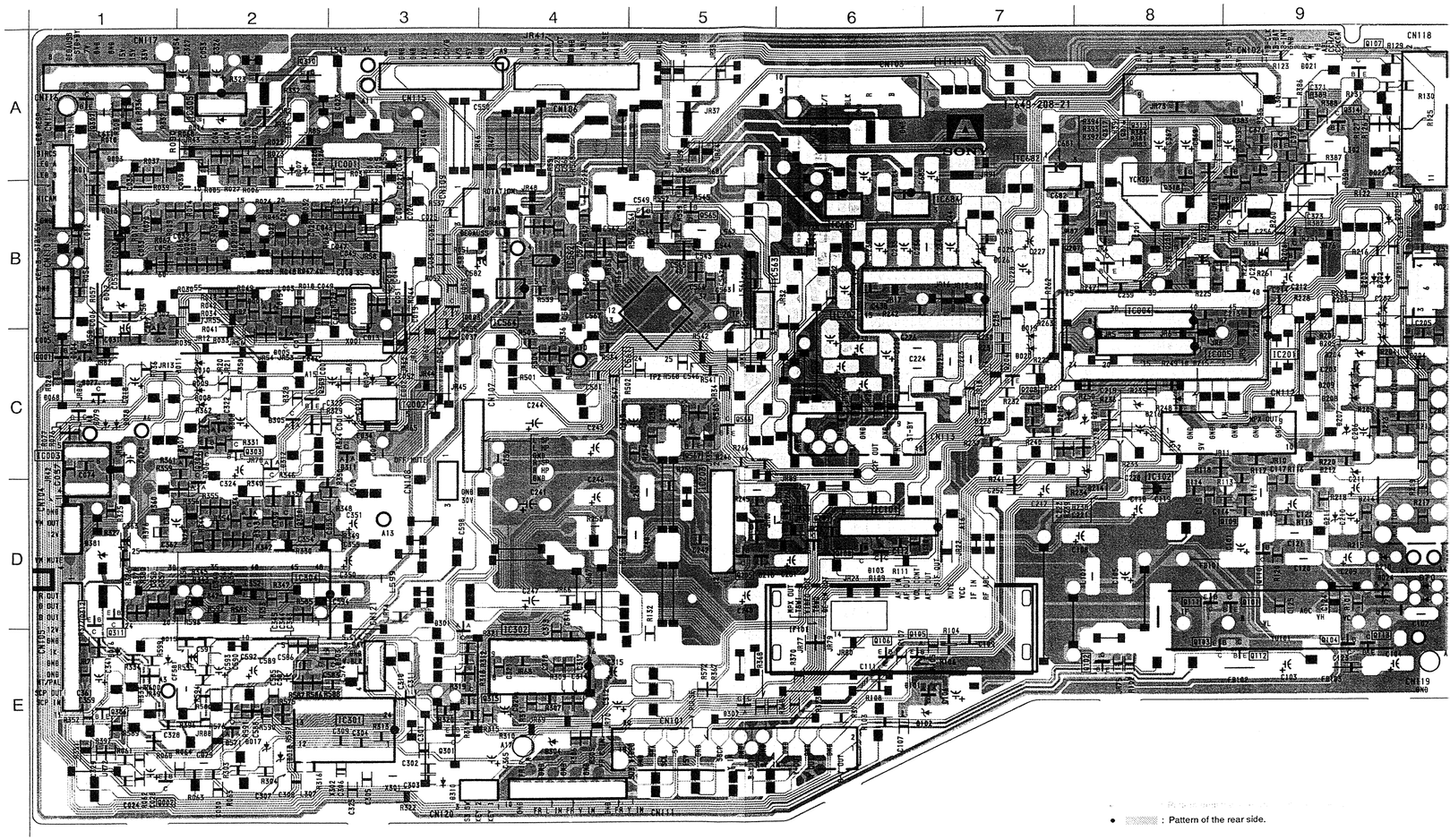

VM [VM OUT]

PRINTED WIRING BOARDS
– VM Board –

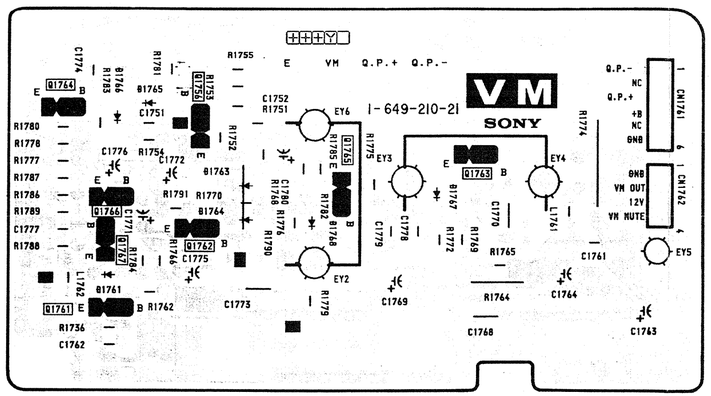

– A2 Board –

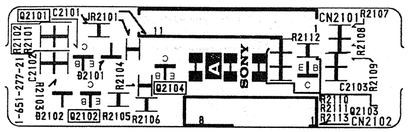

A2 [R, G, B IN/OUT, SCP IN/OUT]

P [P IN P]

– P Board –

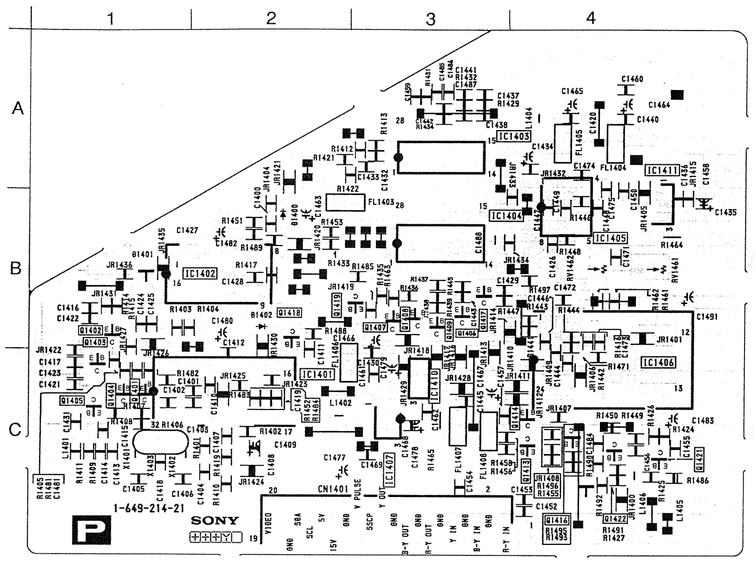

• P BOARD

IC		Q1403 C – 1	DIODE
		Q1404 C – 1	
IC1401 C – 2		Q1405 C – 1	D1400 B – 2
IC1402 B – 2		Q1406 B – 3	D1401 B – 1
IC1403 A – 3		Q1407 B – 3	
IC1404 B – 3		Q1408 B – 3	CRYSTAL
IC1405 B – 4		Q1409 B – 3	
IC1406 C – 4		Q1413 C – 4	X1401 C – 1
IC1407 C – 3		Q1414 C – 4	X1402 C – 1
IC1410 C – 3		Q1416 C – 4	
IC1411 B – 4		Q1417 B – 3	
		Q1418 B – 2	
TRANSISTOR		Q1419 B – 3	
		Q1420	
Q1401 C – 1		Q1421 C – 4	
Q1402 B – 1		Q1422 C – 4	

1 2 3 4 5 6 7 8 9 10 11 12 13 14 15 16 17 18 19 20 21 22

C D E F G H I J K L M N O P

• P BOARD WAVEFORMS

① 2.0 Vp-p (H)	② PAL SECAM NYSC3.58 0.4 Vp-p (H)	② NTSC4.43 0.4 Vp-p (H)	③ PAL SECAM NYSC3.58 0.4 Vp-p (H)
③ NTSC4.43 0.4 Vp-p (H)	④ 1.5 Vp-p (H)	⑤ 1.3 Vp-p (H)	⑥ 1.5 Vp-p (H)
⑦ 1.3 Vp-p (H)			

P Board IC1401 TDA9160

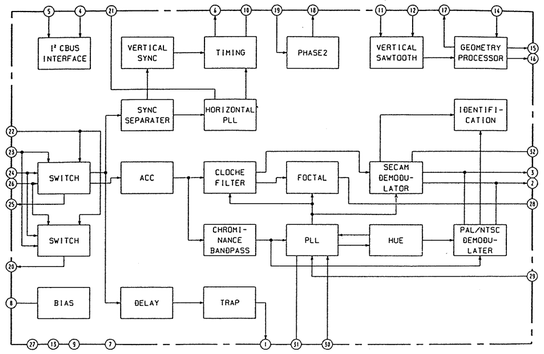

P Board IC1406 TDA8443A

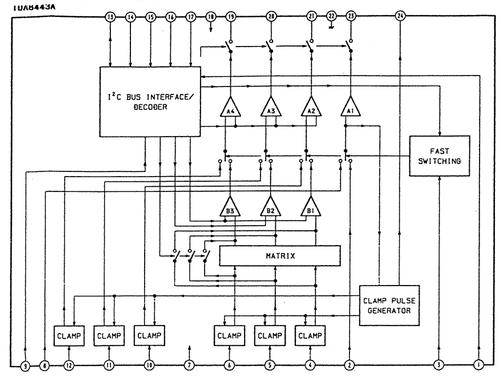

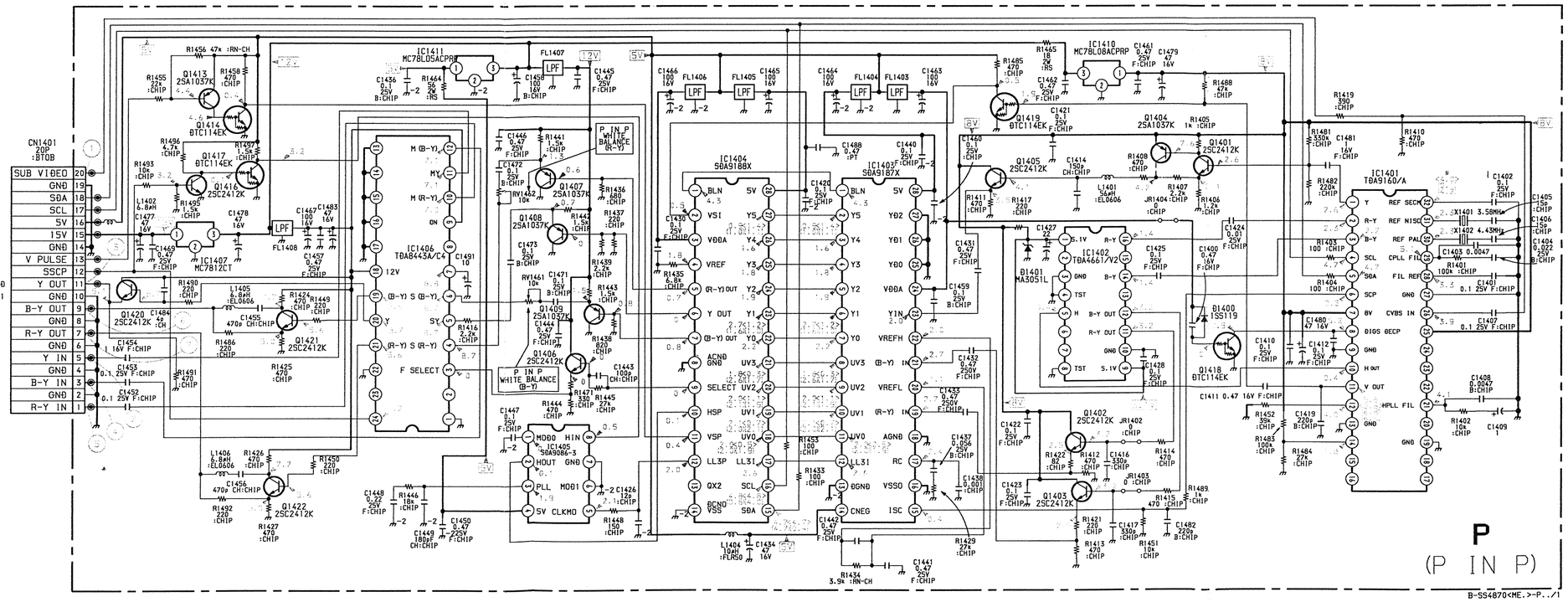

P Board IC1401 TDA9160

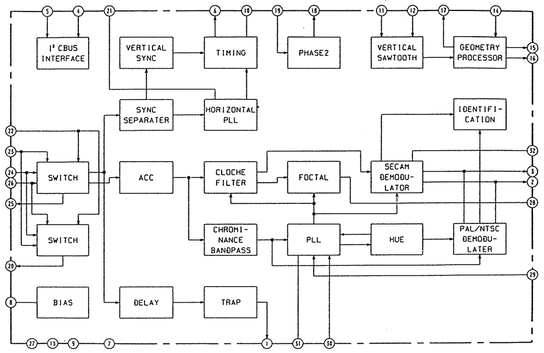

P Board IC1406 TDA8443A

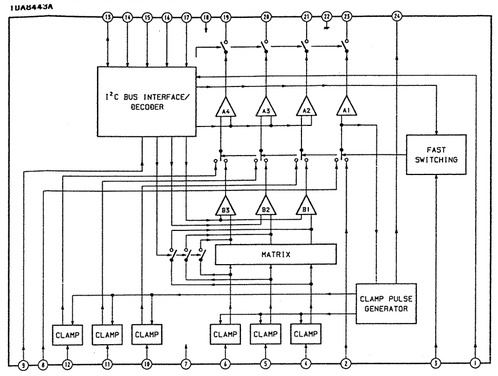

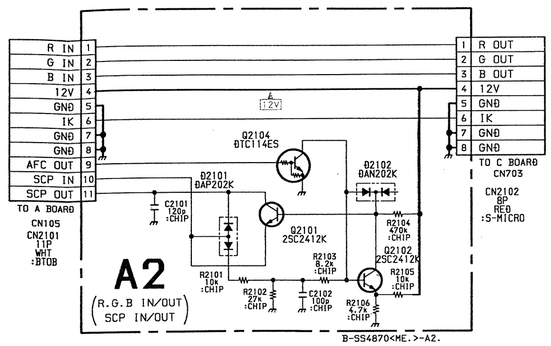

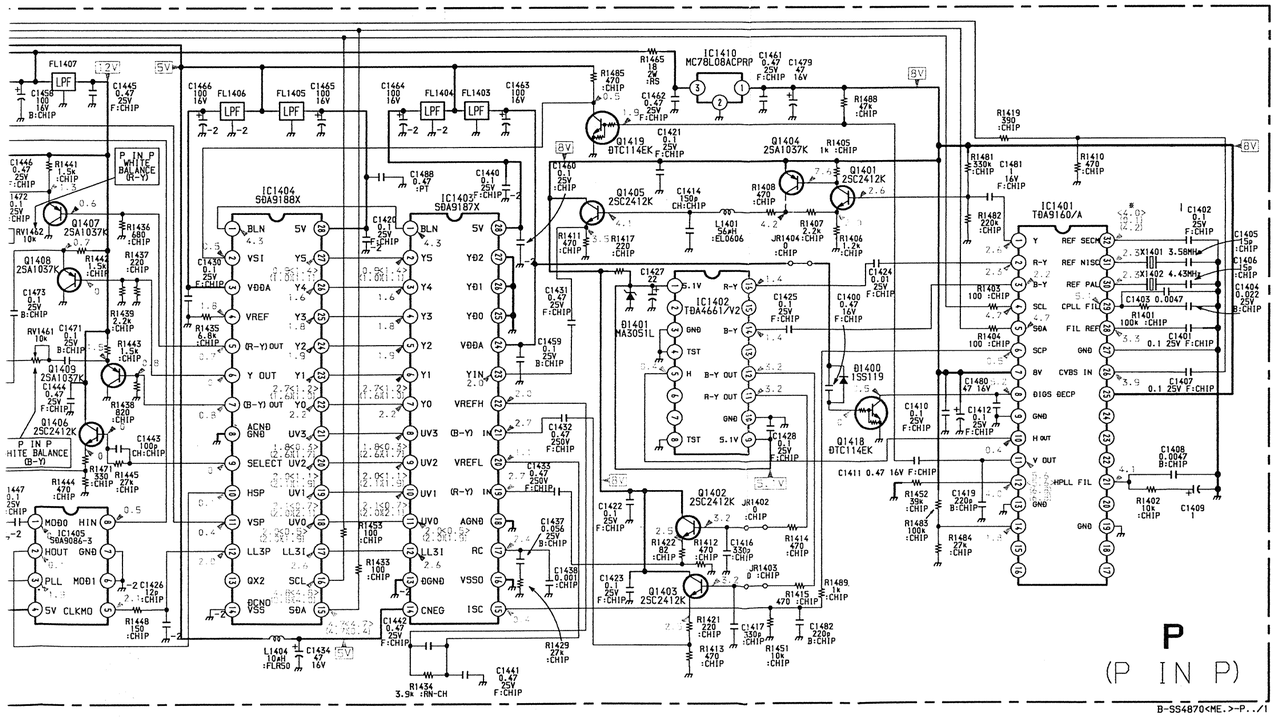

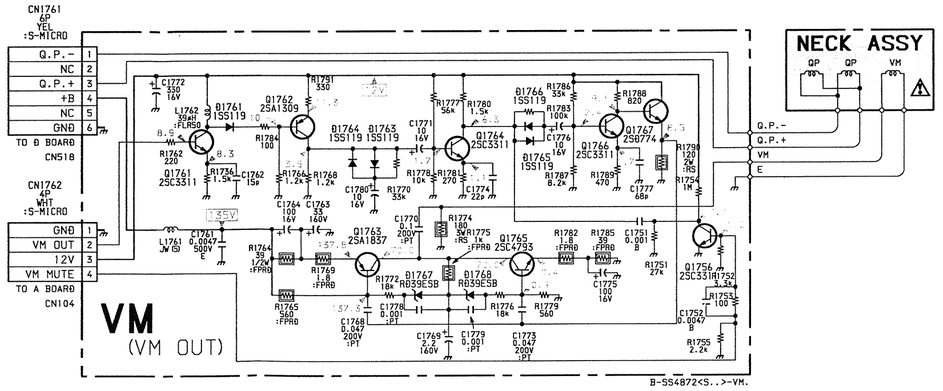

2 3 4 5 6 7 8 9 10 11 12 13 14 15 16 17 18 19 20 21 22 23

F G H I J K L M N O P

• D1 BOARD WAVEFORMS

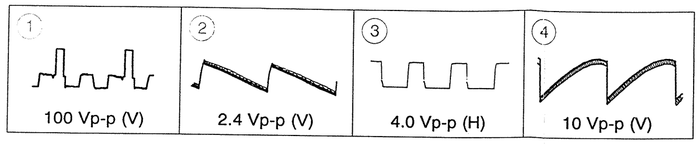

• C BOARD WAVEFORMS

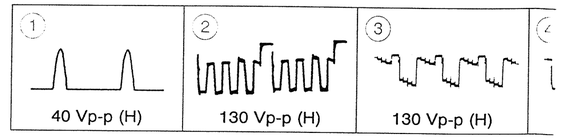

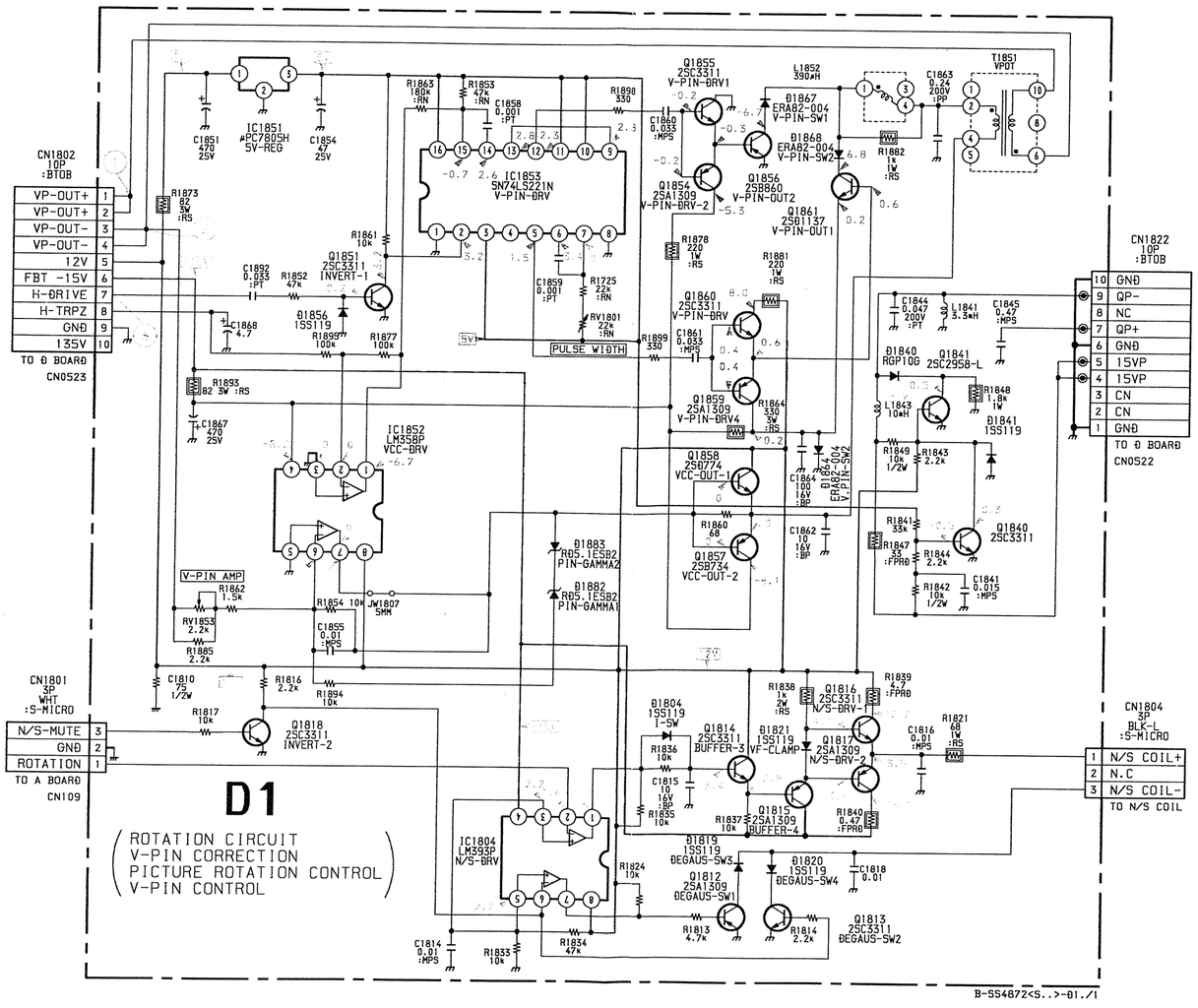

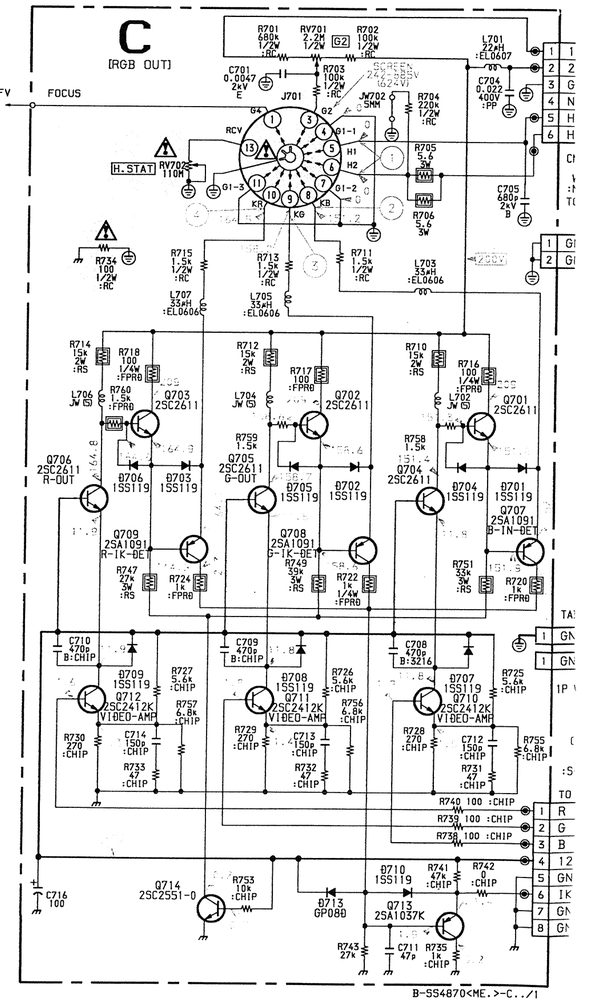

Schematic diagrams
A2 P VM boards
←

Schematic diagrams
C D1 boards
→

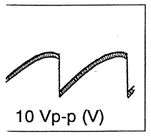

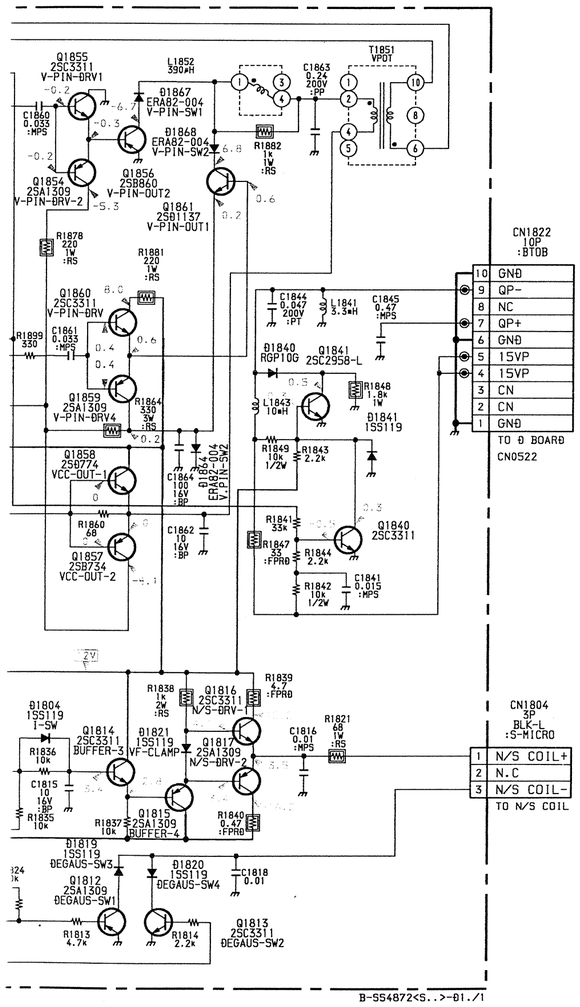

• C BOARD WAVEFORMS

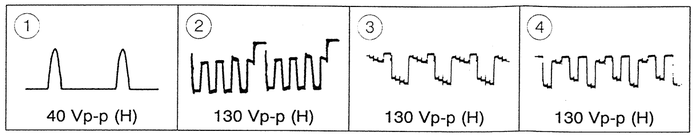

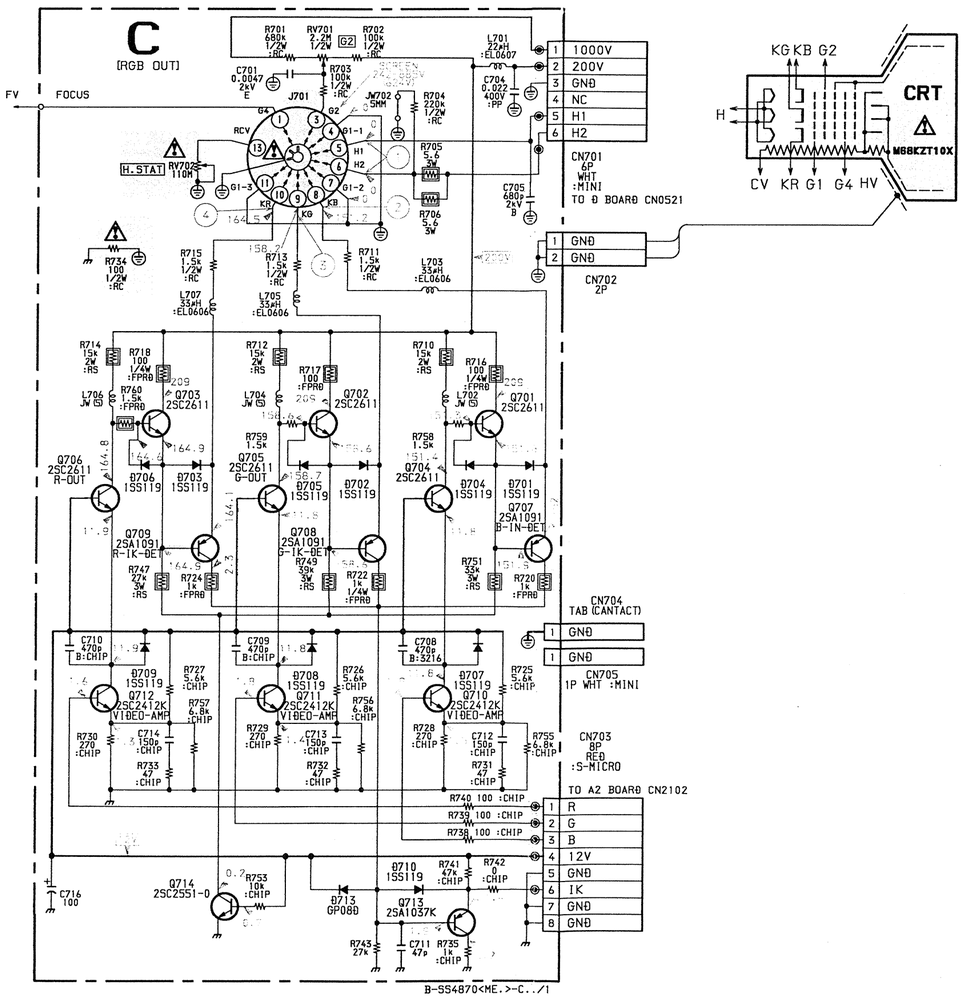

PRINTED WIRING BOARDS
– D1 Board –

D1 [ROTATION CIRCUIT, V-PIN CORRECTION, PICTURE ROTATION CONTROL, V-PIN CONTROL]

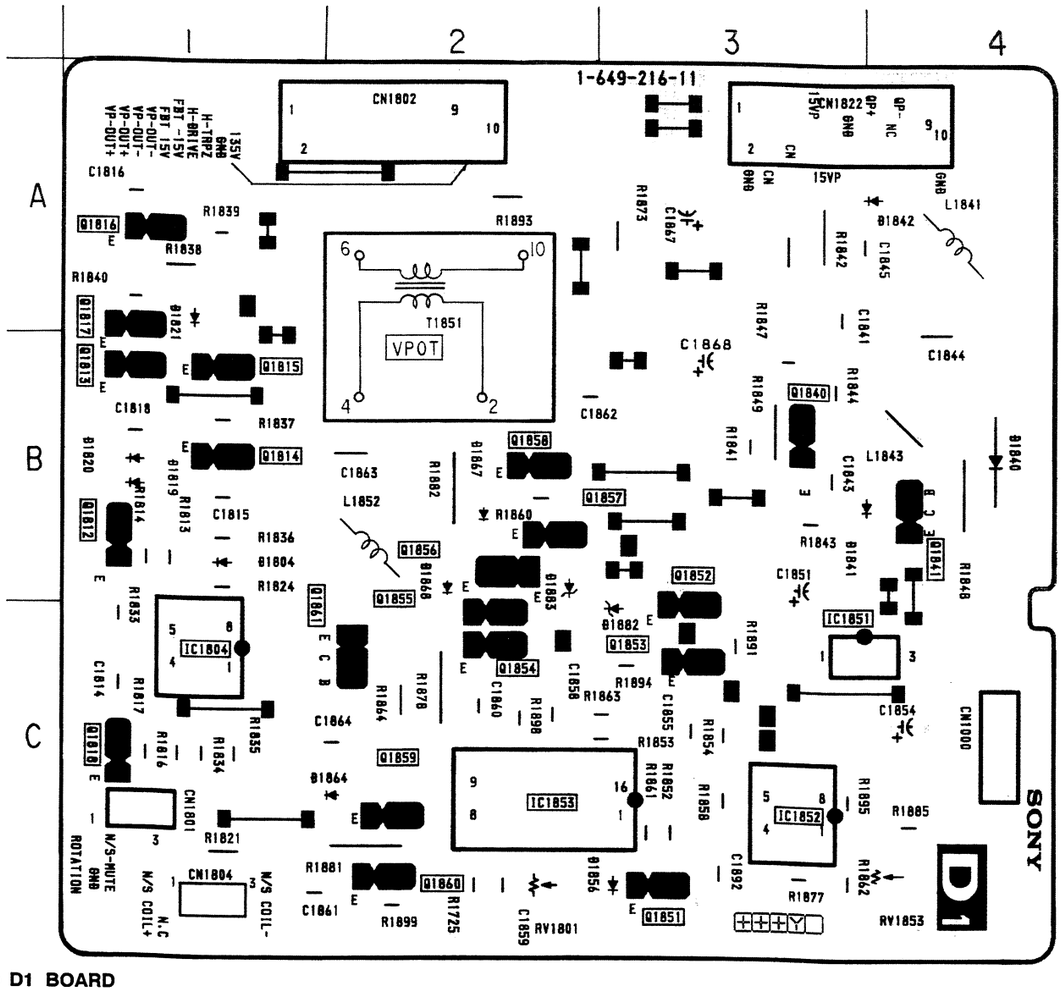

• **D1 BOARD**

IC			
IC1804 C – 1	Q1851 C – 3	D1856 C – 3	
IC1851 C – 3	Q1854 C – 2	D1864 C – 2	
IC1852 C – 3	Q1855 C – 2	D1867 B – 2	
IC1853 C – 2	Q1856 B – 2	D1868 B – 2	
	Q1857 B – 2	D1882 C – 3	
TRANSISTOR	Q1858 B – 2	D1883 B – 2	
	Q1859 C – 2	VARIABLE RESISTOR	
Q1812 B – 1	Q1860 C – 2		
Q1813 B – 1	Q1861 C – 2	RV1801 C – 2	
Q1814 B – 1	DIODE	RV1853 C – 4	
Q1815 B – 1			
Q1816 A – 1	D1804 B – 1		
Q1817 A – 1	D1819 B – 1		
Q1818 C – 1	D1820 B – 1		
Q1840 B – 3	D1821 A – 1		
Q1841 B – 4	D1840 B – 4		
	D1841 B – 3		

C [R, G, B OUT]

– C Board –

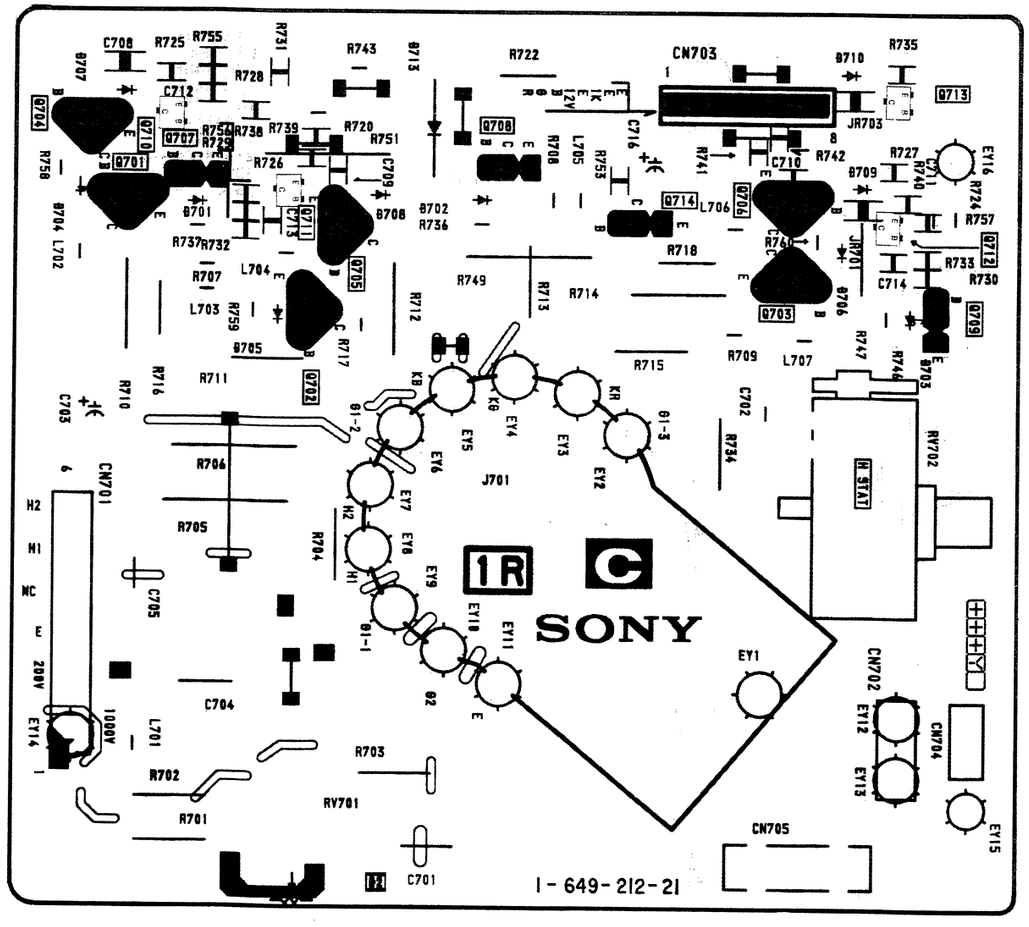

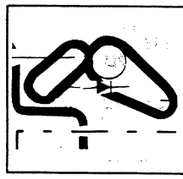

NOTE:
The circuit indicated as left contains high voltage of over 600 Vp-p. Care must be paid to prevent an electric shock in inspection or repairing.

6-3. CIRCUIT BOARDS LOCATION

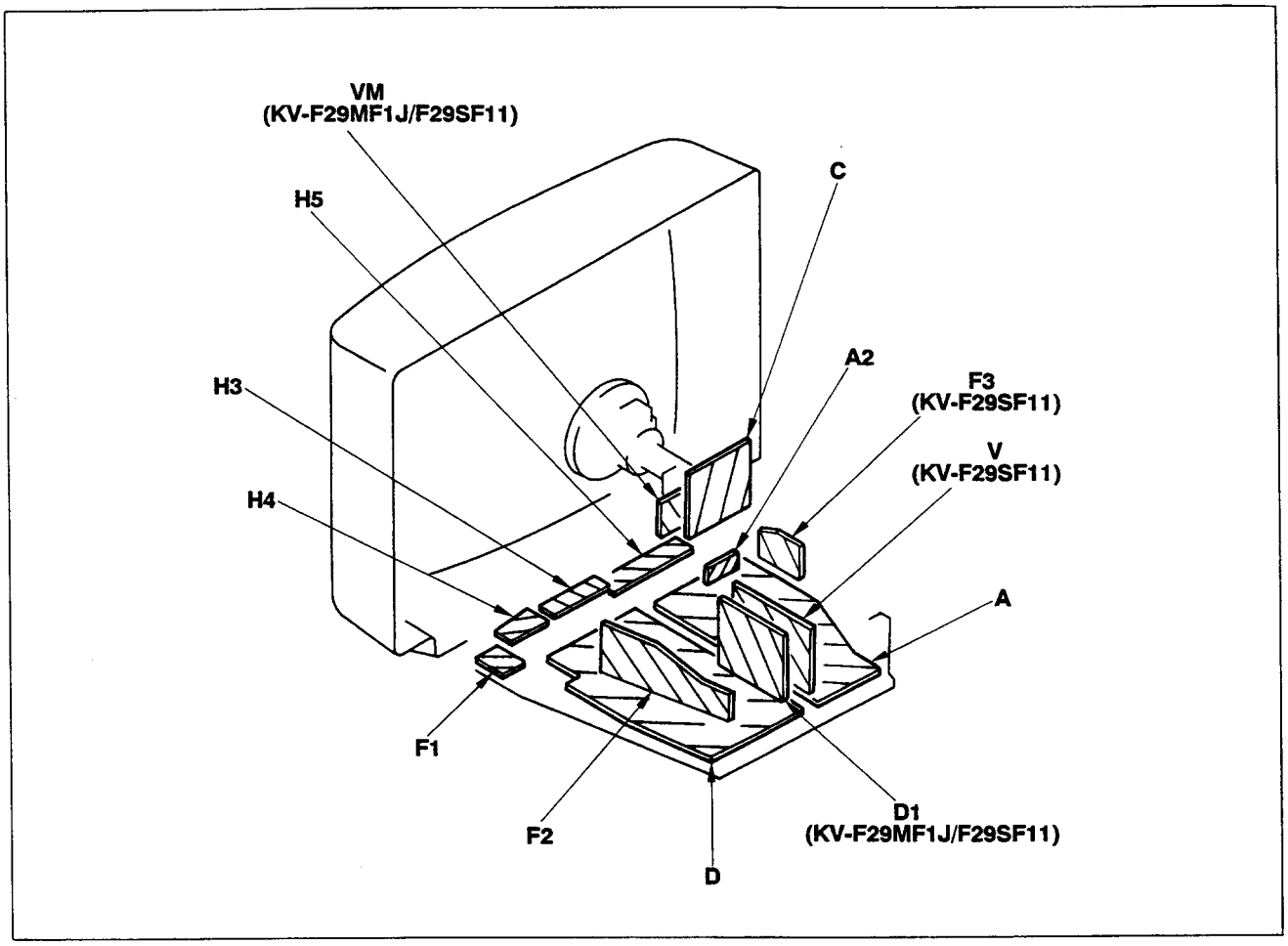

6-5. SEMICONDUCTORS

CAT24C04P
LM358P
LM393P
NJM2903Đ
μPC358C
μPC393C

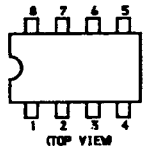

CXA1315P

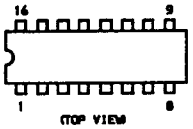

CXA1545AS
CXA1587S

CXĐ2018Q

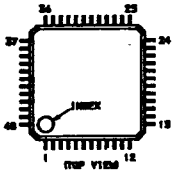

CXP85224-010S

LA7016
NJM2233BL

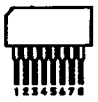

LM2904M
LM358PS
NJM2904M

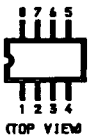

L78LR05Đ-MA

NJM78L05A
NJM78L09A
MC78L05ACPRP
TA78L09S
μPC78L05J

MB3763PS

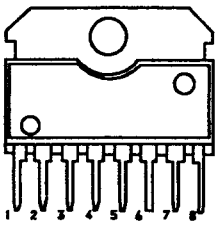

MC7809CT
NJM78M09FA
NJM7809FA
TA7805S
TA7809S
μPC7805H

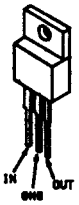

PQ05RF1
PQ12RF2
PQ12RF21

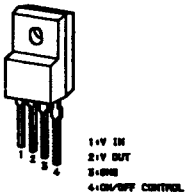

SE135N-LF12

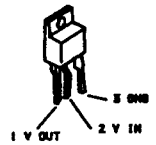

SN74LS221N
TĐA4661/V2
TĐA9821

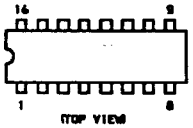

STR-81145A

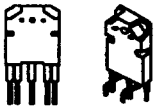

STV-9379

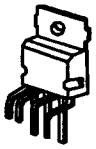

TA8200AH

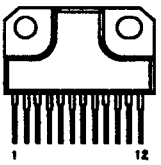

TA8776N

TĐA9145/N2B

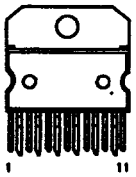

ĐTA114EK
ĐTA144EK
ĐTC114EK
ĐTC144EK
2SA1037K
2SA1162-G
2SC1623-L5L6
2SC2412K-R
2SC2412K-QR
2SC2413K
2SC2413KQ

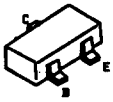

ĐTC114ES
ĐTC144ES
2SC2603-EF

2SA1091-O
2SA1091-R
2SC2551-O

2SA1175-HFE
2SA1309A
2SC2785-HFE
2SC3311A
2SC3311-QRS

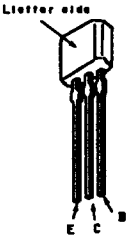

2SA1315-Y

2SA1837
2SB858-C
2SB860
2SC4793
2SĐ1137

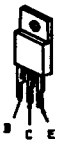

2SB734-4
2SB734-34
2SC2958-L
2SĐ774
2SĐ774-34

2SC2611
2SC2688-LK
2SC3502-E
2SC3601-E

2SC4927-01

ĐAN202K

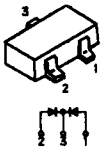

ĐAP202K

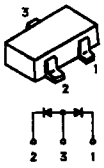

ĐA204K

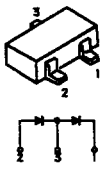

Đ4SB60L

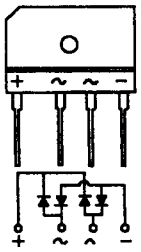

EGP20G
EG01
EL-1Z
EU-1Z
EU-2
GP8Đ
GP8ĐPKG23
RĐ33ES-B
RGP10G
RGP10GPKG23
RGP15G
RGP15J
RU30A
R2K-V1

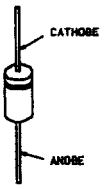

EG01
ERC06-15S
RGP02-20EL-6394
S3L20UF4

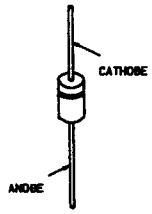

ERĐ29-08J
RGP02-17PKG23
RGP02-17EL-6433
RU4AM
RU4ĐS

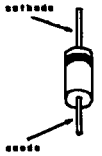

MA3047
RĐ13M-B1
RĐ3.6M-B2
RĐ4.7M-B2
RĐ5.6M-B3
RĐ6.8M-B1

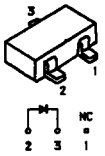

PC111LS
PC111YS

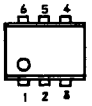

RM11C

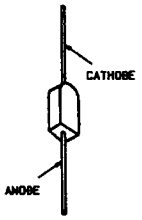

5P4M
5P6M

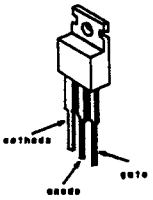

7-1. CHASSIS

●: +BVTP3 × 12 7-685-648-79
■: +BVTP4 × 16 7-685-663-79

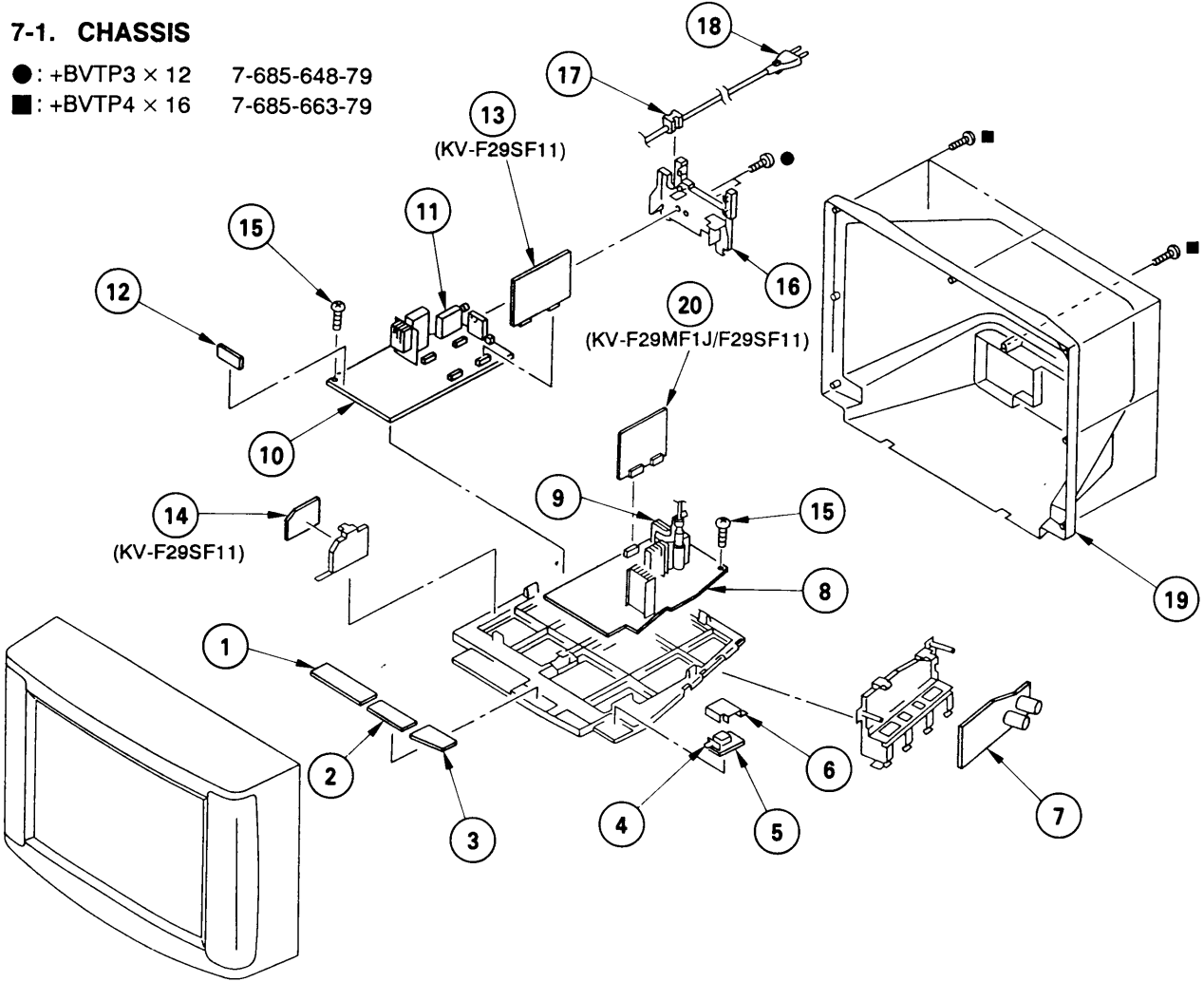

7-2. PICTURE TUBE
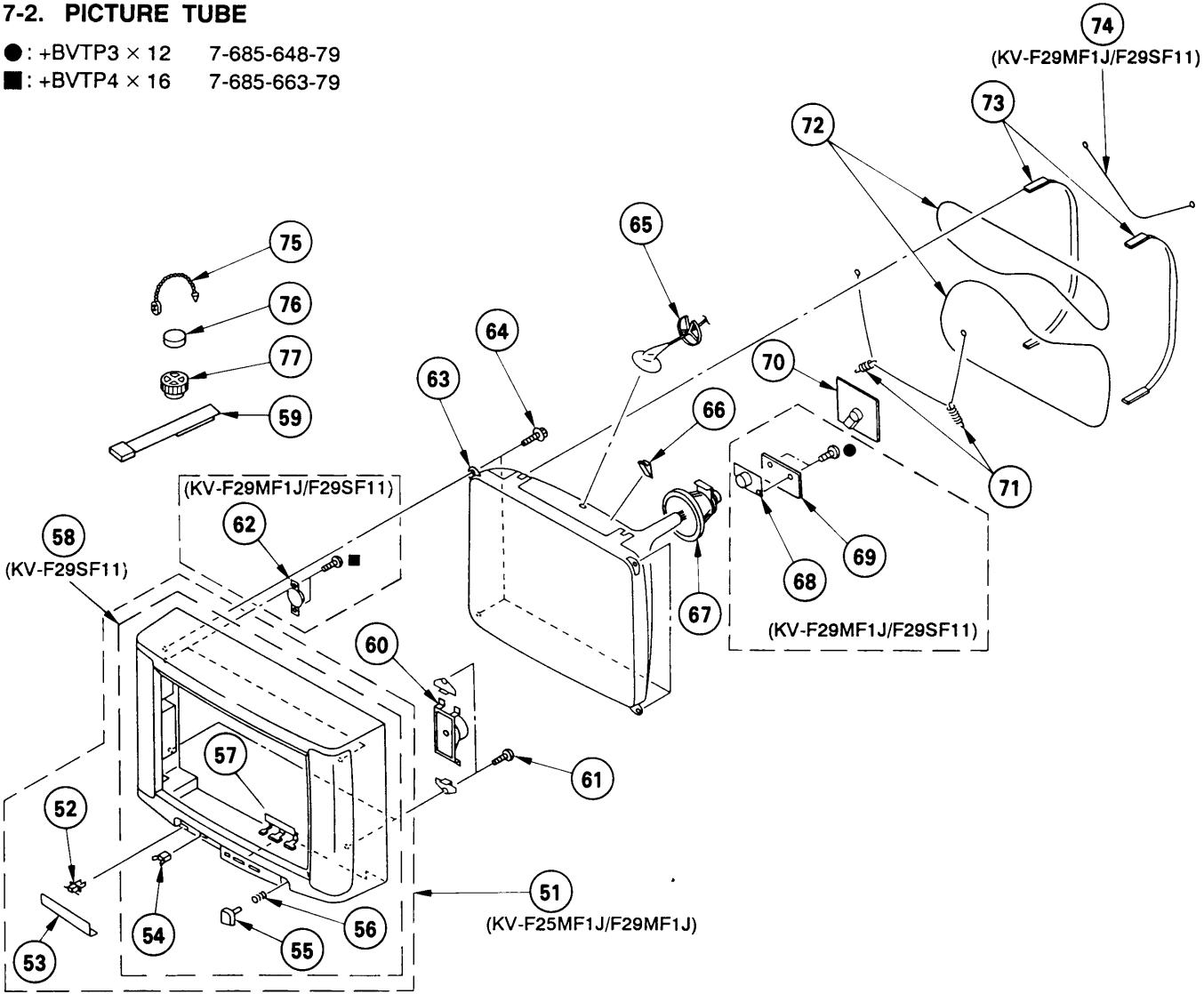
● : +BVTP3 × 12 7-685-648-79
■ : +BVTP4 × 16 7-685-663-79